EAE
ELEKTRİK

E-LINE CCR

Busbar Systems 600A...6300A

www.eaeelectric.com

E-LINE CCR

Please visit our website for the updated version of our catalogues.
www.eaeelectric.com

CONTENTS

E-LINE CCR

Introduction 2-3
Distribution & Horizontal Applications 4
Riser & Vertical Applications 5
Al Technical Characteristics 6-7
Cu Technical Characteristics 8-9
Order Code System 10
Standard Straight Length 11
Elbows 12-16
Standard Components 17-18
End Closers 19
Panel Connections / Transformer Connections 20-26
Edgewise and Flatwise CCR Applications 27
Fixing Elements 28-33
Measuring a Special Length 34
Preparation of Joint Flex-Comp 35
Joint Installation / Horizontal 36-37
Joint Installation / On Edge 38-39
Joint Installation / Vertical 40-41
Declaration 42
Certificates 43
Product Overview 44
Project Design Form 45-46

E-LINE CCR

▶▶Introduction

Traditionally, carrying high currents (transformer to switchboards, main distribution lines, power distribution for factories) was achieved using multiples of large cross-section cables in parallel.
In order to support these cables in the buildings, there were used a lot of cable trays, cable ladders, under-floor cable channels, etc.

Using "Cast Resin Busbars" in outdoor environments, gallery transitions, chemical plants, harbour applications, tunnels instead of cables that are applied as mandatory offers many advantages.

Safe and Easy Installation
Detachable IP 68 Ext.
Due to alignment piece on the joint point, block joint element and busbar tray are aligned. This makes installation easier and correct on the right axes.

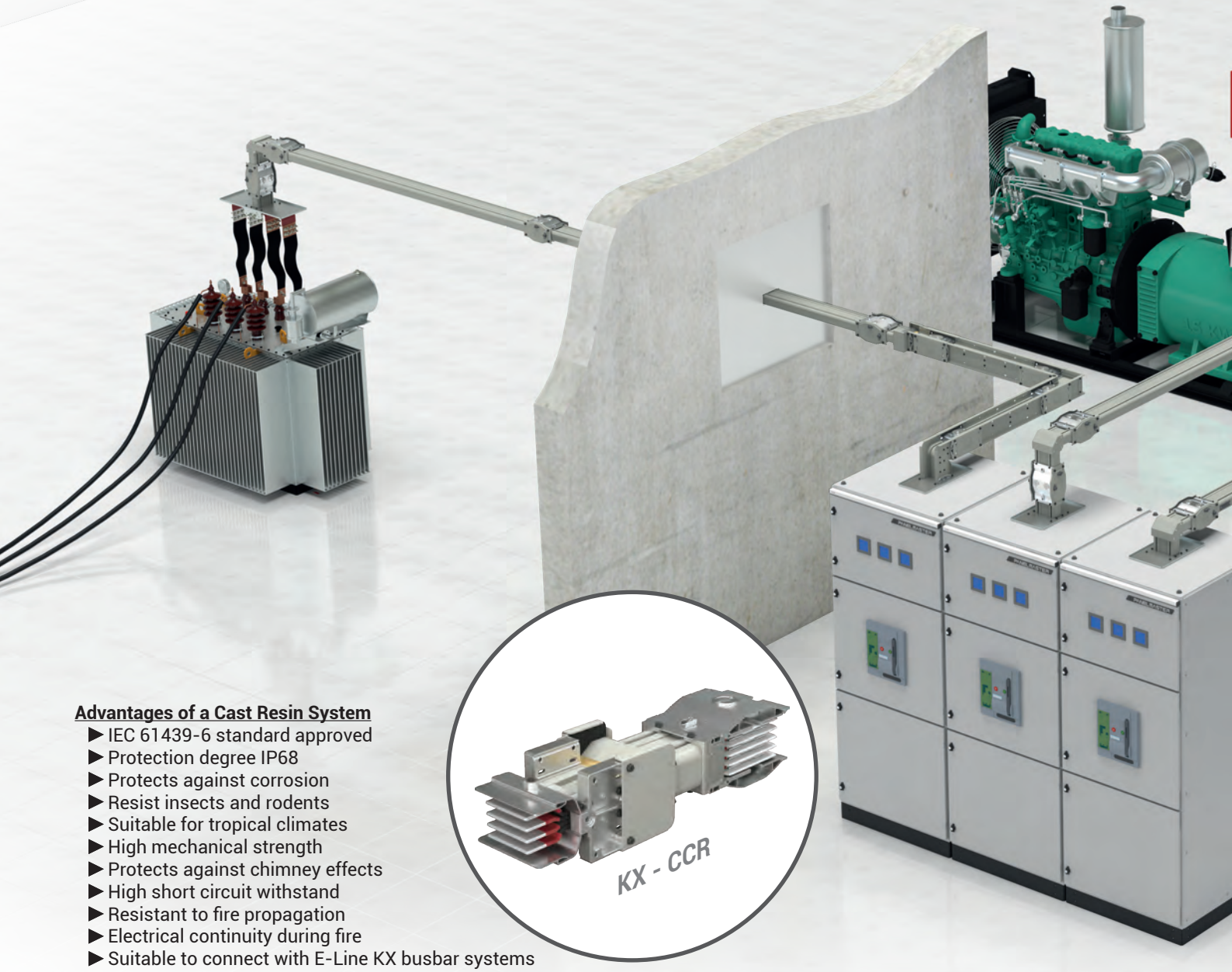

Advantages of a Cast Resin System

- ▶ IEC 61439-6 standard approved
- ▶ Protection degree IP68
- ▶ Protects against corrosion
- ▶ Resist insects and rodents
- ▶ Suitable for tropical climates
- ▶ High mechanical strength
- ▶ Protects against chimney effects
- ▶ High short circuit withstand
- ▶ Resistant to fire propagation
- ▶ Electrical continuity during fire
- ▶ Suitable to connect with E-Line KX busbar systems
- ▶ Voltage layout advantage thanks to its compact structure

***Special components can be manufactured quickly.**

E-LINE CCR

High IP Isolation
Aluminium body over the IP 68 "DUROCOMP" composite material that is made by specially selected pure silicium minerals and epoxy resin and has high temperature and mechanical operation features protects E-LINE CCR busbar from external elements.

Effective Heat Dissipation
Heat accumulated in conductors are transferred into the environment through the aluminium body thanks to the additives with high heat transfer rate used in the system. (Figure 1)

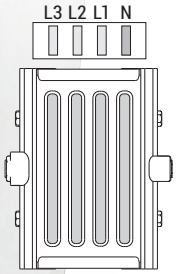

Figure 1

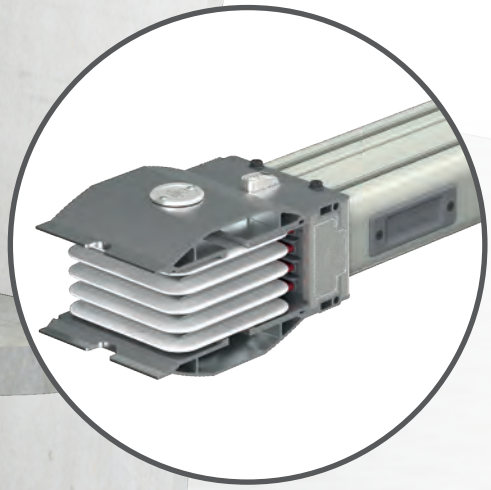

Short Circuit Withstand
High mechanical and thermal resistance within aluminium body thanks to DUROCOMP material.

One Bolt Joint Ensures Safety and Easy Installation

E-Line CRR Busbars are installed by tightening the "one bolt joint". **Belleville spring washers** on both ends of the bolt retains the original contact pressure, ensuring a more secure, reliable and maintenance - free joint.

***The bolt is tightened to 83Nm (60 lbft)**

Fire and Earthquake Resistance
- ▶ 3 hours Electrical Continuity under Fire as per IEC 60331-1
- ▶ 2 hours current continuity according to BS 8602 standard
- ▶ Seismic Resistance as per IEC 60068-3-3 / 60068-2-57 and IEEE 693

EX - Protected
- ▶ ATEX as per EN 60079-0:2009, EN 60079-18:2009, EN60079-31:2009

II 2G Ex mb IIC Gb
II 2D IIIC Db

E-LINE CCR

▶▶Distribution & Horizontal Applications

When using the E-Line CCR to create an electrical distribution system, the following criteria should be taken into consideration.

- The Power of the load to be connected to the system and their locations.
- Utilisation factor (diversity) assay,
- Power and short circuit currents of transformers, System coordination with other distribution systems (heat, steam, water, etc.),
- Determining a route of the E-Line CCR on layout of the designed system,
- Determination of the types of supports according to plan,
- If necessary, the system can be integrated with E-Line KX busbar system.

Rated Current

The rating of the busbar current required is calculated using the formula shown below.

$$I_B = \frac{P.\alpha}{\sqrt{3}.U.\cos\varphi}$$

I_B = Operation current (A)
P = Total power load (W)
α = Utilisation factor (diversity)
U = Supply voltage (V)

- The busbar current rating is chosen as being equal to, or greater than the calculated current (IB).
- After calculating the volt drop, if the current rating is not adequate, then a higher rating should be chosen.

Utilisation Factor (Diversity)

The utilisation factor (a) depends on the type and number of loads. Most are 0.7 or less. Intense Lighting and Motor Fed Lines “0,6” is quite difficult to rise above. Even at automobile welding plants it could fall down to “0,30”. With only one single and large load can it go up to “1”.

Voltage Drop

All the required values for voltage Drop Calculations, formulas, basic calculations for simple cases the tables are given on pages 6-9. Further support can be obtained from our Design Department.

Short Circuit Values

Short circuit test values are given on the tables on pages 6-9. The short circuit values high-light the high short circuit withstand characteristic of the E-Line CCR.

Busbar Installation Plan

Shown below is an example of an E-Line CCR busbar system. On request, our distributors' project and design departments will be pleased to help you in preparing your project.

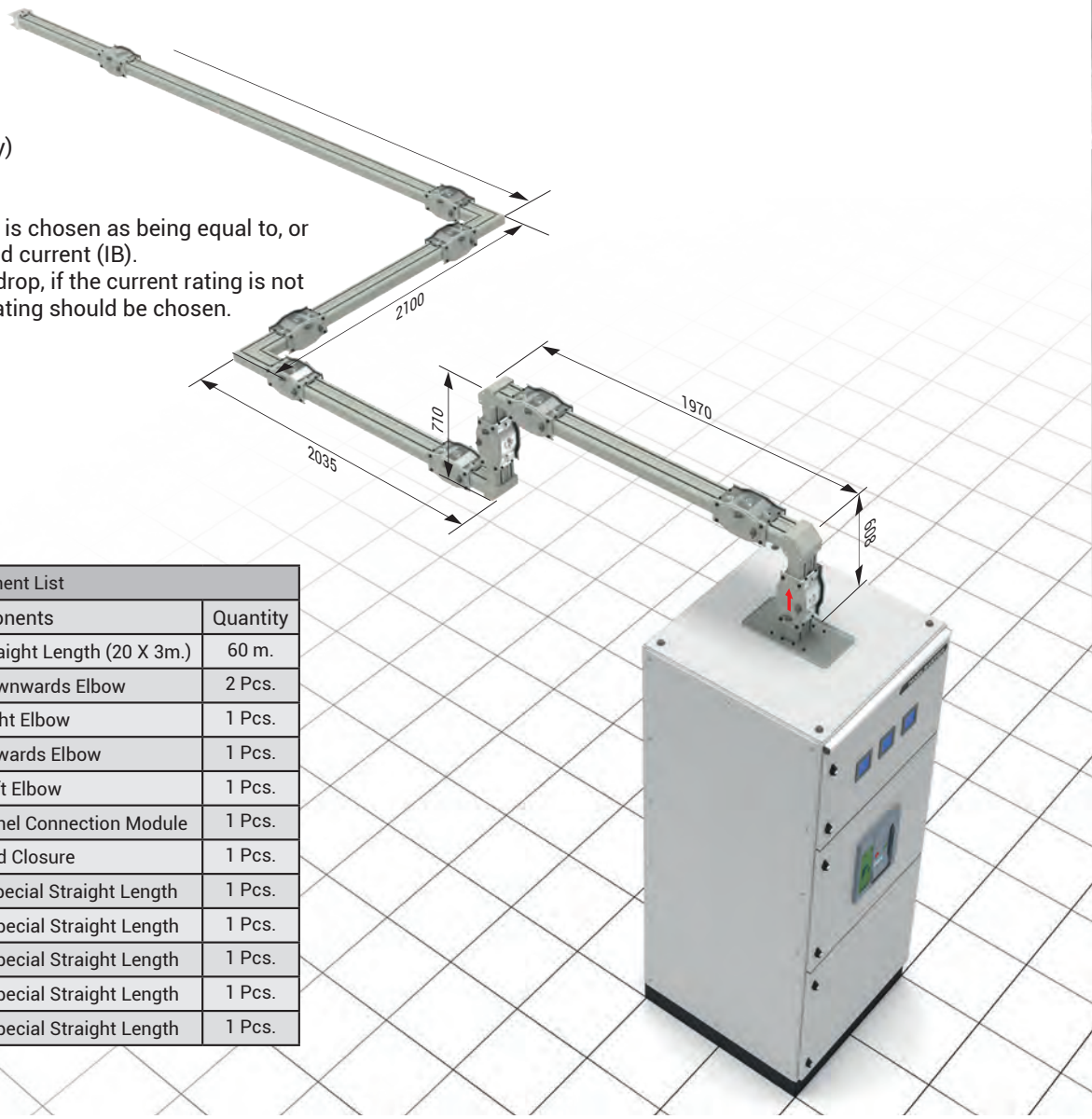

Component List		
Item No	Components	Quantity
1	CCRC 20804 - STD Straight Length (20 X 3m.)	60 m.
2	CCRC 20804 - D Downwards Elbow	2 Pcs.
3	CCRC 20804 - R Right Elbow	1 Pcs.
4	CCRC 20804 - U Upwards Elbow	1 Pcs.
5	CCRC 20804 - L Left Elbow	1 Pcs.
6	CCRC 20804 - P10 Panel Connection Module	1 Pcs.
7	CCRC 20804 - S End Closure	1 Pcs.
8	CCRC 20804 - X95 Special Straight Length	1 Pcs.
9	CCRC 20804 - X120 Special Straight Length	1 Pcs.
10	CCRC 20804 - X122 Special Straight Length	1 Pcs.
11	CCRC 20804 - X200 Special Straight Length	1 Pcs.
12	CCRC 20804 - X174 Special Straight Length	1 Pcs.

E-LINE CCR

▶▶Riser & Vertical Applications

As each building's structure is different, each of the **E-Line CCR** projects has to be specially designed.

The details on this page briefly explain the information necessary for designing the vertical installation project.

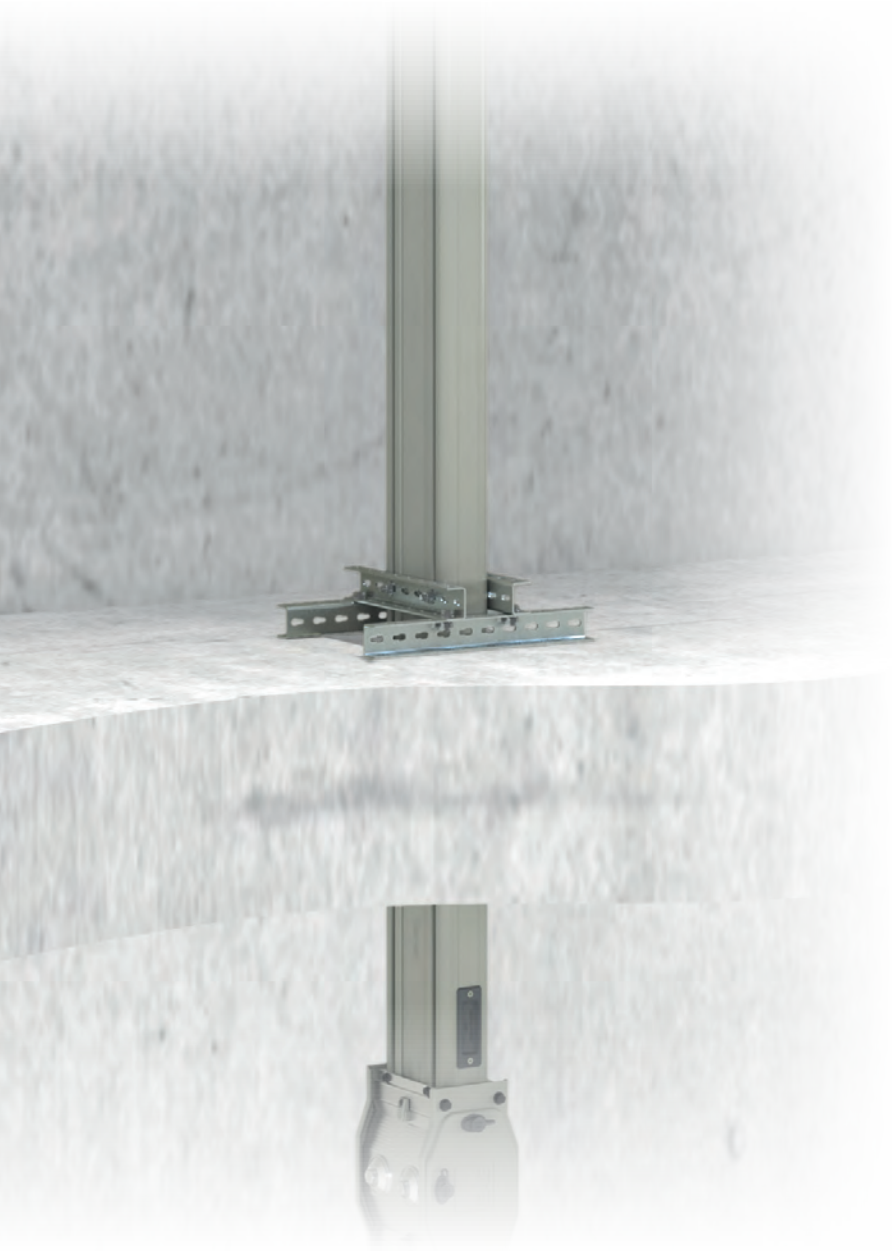

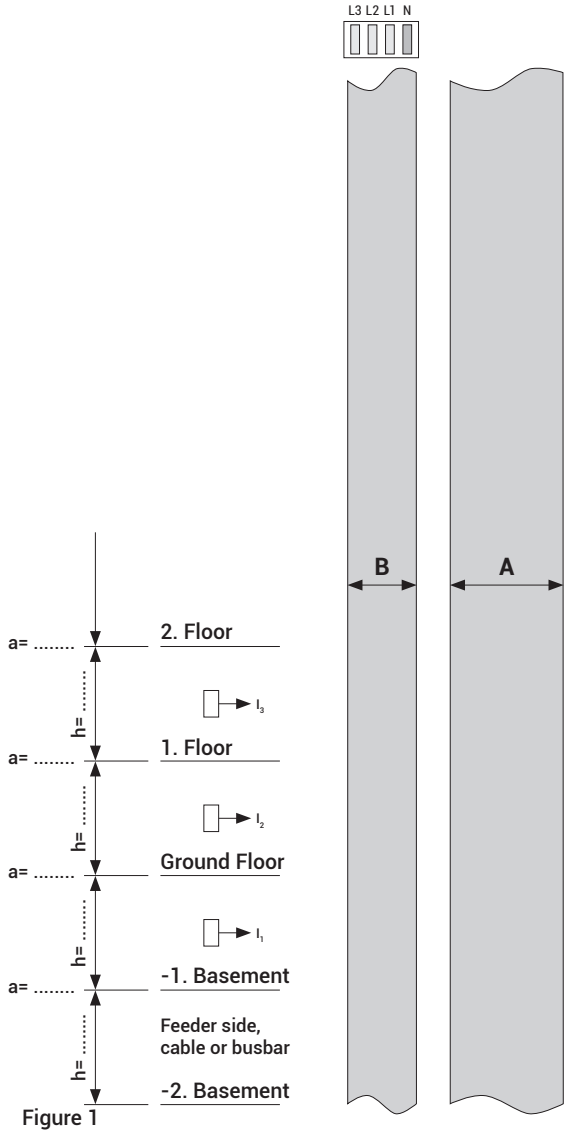

Figure 1

Pre-Project Design and cost Analysis

Before design and cost analysis can be made, please submit the following information to our Design Department.

Location and Dimensions of the floor penetration where the busbar line will be installed.
Floor height and Floor thickness (h=... a=...)
Vertical line feeding method (by busbar or by cable)

By supplying the above information of the dimensions on a drawing similar to the example in Figure 1 and by faxing or emailing it to us we will be able to produce a quotation.

Please refer to table on page 11 for "A" size.

Number of Conductors	B (mm)
3 Conductors	73
4 Conductors	80
4 ½ Conductors	87
5 Conductors	87

E-LINE CCR

▶▶Technical Characteristics

Aluminium Conductor (Al)

Rated Current	I_n	A	600	800	1000	1250	1600	2000
Busbar Code			06	09	10	12	16	21
Standards	IEC 61439-6:2012 Ed.1 IEC 61439-1 Ed.2:2011, TS EN 61439-1: 2011							
Rated Operational Voltage	U_e	V	1000	1000	1000	1000	1000	1000
Rated Isolation Voltage	U_i	V_{ac}	1000	1000	1000	1000	1000	1000
Rated Impulse Withstand Voltage	U_{imp}	kV	12	12	12	12	12	12
Rated Frequency	f	Hz	50 / 60	50 / 60	50 / 60	50 / 60	50 / 60	50 / 60
Pollution Degree			III	III	III	III	III	III
Protection Degree	IP 68		IP 68	IP 68	IP 68	IP 68	IP 68	IP 68
External Mechanical Impacts (IK Code)*	50J, >IK10		50J, >IK10	50J, >IK10	50J, >IK10	50J, >IK10	50J, >IK10	50J, >IK10
Rated Short-time Withstand Current (1s - 3 phase)	I_{cw}	kA	25	35	35	55	60	80
Rated Peak Withstand Current	I_{pk}	kA	52,5	73,5	73,5	121	132	176
Rated Short-time Withstand Current for Neutral Conductor (1s) (Single phase)	I_{cw}	kA	15	21	21	33	36	48
Rated Peak Withstand Current for Neutral Conductor (Phase-Neutral)	I_{pk}	kA	31,5	44,1	44,1	69,3	75,6	100,8
Rated Short-time Withstand Current for PE (Housing-Phase) Conductor	I_{cw}	kA	15	21	21	33	36	48
Rated Peak Withstand Current for PE (Housing-Phase) Conductor	I_{pk}	kA	31,5	44,1	44,1	69,3	75,6	100,8
PHASE CONDUCTOR CHARACTERISTICS (In)								
Resistance at a conductor temperature of 20°C	R_{20}	mΩ/m	0,1219	0,0613	0,0506	0,0439	0,0294	0,0215
Resistance at an ambient air temperature of 35°C	R	mΩ/m	0,1689	0,0807	0,0652	0,0569	0,0392	0,0279
Reactance (Independent from Temperature)	X	mΩ/m	0,032	0,0175	0,0142	0,0131	0,0095	0,0065
Positive and negative sequence impedances at an ambient air temperature of 35°C	Z	mΩ/m	0,1719	0,0825	0,0667	0,0584	0,0403	0,0286
Positive and negative sequence impedances at an ambient air temperature of 20°C	Z_{20}	mΩ/m	0,1261	0,0637	0,0525	0,0458	0,0309	0,0225
Rated Power Loss at 35°C		W/m	173,4	192,6	190,8	255,9	294,1	327
DC Resistance at a conductor temperature of 20°C for Phases	$R_{ph(dc)}$	mΩ/m	0,113	0,059	0,049	0,043	0,031	0,021
DC Resistance at a conductor temperature of 20°C for Neutral	$R_{N(dc)}$	mΩ/m	0,113	0,059	0,049	0,043	0,031	0,021
DC Resistance at a conductor temperature of 20°C for PE	$R_{PE(dc)}$	mΩ/m	0,122	0,063	0,051	0,035	0,026	0,022
SECTIONS								
L1, L2, L3 (Phase Conductor)		mm²	240	480	570	660	960	1380
Neutral		mm²	240	480	570	660	960	1380
PE (Aluminium Housing)		mm²	1179	1784	1949	1984	2379	2986
Conductor Dimensions		mmxmm	6x40	6x80	6x95	6x110	6x160	6x230
Busbar Weight (3 conductors)		kg/m	12,4	18,4	20,8	23,3	31,7	42,5
Busbar Weight (4 conductors)		kg/m	12,8	19,2	21,5	24,5	33,5	45,0
Busbar Weight (4,5 conductors)		kg/m	13,9	20,9	23,3	26,6	36,4	49,1
Busbar Weight (5 conductors)		kg/m	14,0	21,1	23,9	27,0	36,8	49,4
MEAN FAULT-LOOP CHARACTERISTICS								
Zero-sequence Impedance								
Zero-sequence impedance at a conductor temperature of 20°C (Phase-Neutral)	$Z_{(0)b20phN}$	mΩ/m	0,532	0,293	0,246	0,207	0,144	0,103
Zero-sequence impedance at a conductor temperature of 20°C (Phase-Housing)	$Z_{(0)b20phPE}$	mΩ/m	0,301	0,214	0,185	0,162	0,147	0,093
Zero-sequence impedance at an ambient temperature of 35°C (Phase-Neutral)	$Z_{(0)bphN}$	mΩ/m	0,717	0,376	0,309	0,261	0,187	0,131
Zero-sequence impedance at an ambient temperature of 35°C (Phase-Housing)	$Z_{(0)bphPE}$	mΩ/m	0,376	0,258	0,216	0,191	0,183	0,109
Mean Resistances and Reactances								
Resistance at a conductor temperature of 20°C	$R_{b20phph}$	mΩ/m	0,241	0,128	0,105	0,088	0,061	0,044
Resistance at a conductor temperature of 20°C	R_{b20phN}	mΩ/m	0,246	0,132	0,108	0,091	0,063	0,046
Resistance at a conductor temperature of 20°C	$R_{b20phPE}$	mΩ/m	0,159	0,098	0,081	0,069	0,062	0,038
Resistance at an ambient air temperature of 35°C	R_{bphph}	mΩ/m	0,333	0,168	0,135	0,114	0,081	0,058
Resistance at an ambient air temperature of 35°C	R_{bphN}	mΩ/m	0,341	0,173	0,139	0,118	0,084	0,060
Resistance at an ambient air temperature of 35°C	R_{bphPE}	mΩ/m	0,221	0,129	0,104	0,090	0,082	0,049
Reactance (Independent from temperature)	X_{bphph}	mΩ/m	0,060	0,033	0,028	0,024	0,019	0,012
Reactance (Independent from temperature)	X_{bphN}	mΩ/m	0,084	0,047	0,039	0,035	0,027	0,018
Reactance (Independent from temperature)	X_{bphPE}	mΩ/m	0,083	0,054	0,049	0,043	0,033	0,025

Attention! The standard mounting of the Cast Resin busbar is with the conductors on edge.
This allows for the easy application of the resin at the joint.

2500	3000	3300	3600	4000	4500	5000	5400
25	31	33	37	41	44	50	54
1000	1000	1000	1000	1000	1000	1000	1000
1000	1000	1000	1000	1000	1000	1000	1000
12	12	12	12	12	12	12	12
50 / 60	50 / 60	50 / 60	50 / 60	50 / 60	50 / 60	50 / 60	50 / 60
III	III	III	III	III	III	III	III
IP 68	IP 68	IP 68	IP 68	IP 68	IP 68	IP 68	IP 68
50J, >IK10	50J, >IK10	50J, >IK10	50J, >IK10	50J, >IK10	50J, >IK10	50J, >IK10	50J, >IK10
100	100	100	100	100	100	100	100
220	220	220	220	220	220	220	220
60	60	60	60	60	60	60	60
132	132	132	132	132	132	132	132
60	60	60	60	60	60	60	60
132	132	132	132	132	132	132	132
0,0187	0,0155	0,0138	0,0125	0,0106	0,0092	0,0090	0,0080
0,0244	0,0208	0,0186	0,0168	0,0139	0,0121	0,0120	0,0110
0,0055	0,0051	0,0044	0,0041	0,0031	0,0033	0,0029	0,0030
0,0250	0,0214	0,0191	0,0173	0,0142	0,0125	0,0124	0,0110
0,0195	0,0164	0,0145	0,0131	0,0110	0,0097	0,0095	0,0090
451,8	574,4	594.8	658.2	651	713,8	880,7	939,8
0,018	0,015	0,013	0,011	0,011	0,009	0,009	0,008
0,018	0,015	0,013	0,011	0,011	0,009	0,009	0,008
0,035	0,022	0,021	0,009	0,015	0,004	0,008	0,015
1560	1920	2160	2400	2760	3000	3240	3600
1560	1920	2160	2400	2760	3000	3240	3600
4548	4758	5010	5133	5972	6104	7515	7699
2x6x130	2x6x160	2x6x180	2x6x200	2x6x230	2x6x250	3x6x180	3x6x200
53,7	63,4	69,4	76,1	85,0	91,7	104,0	114,3
56,4	67,0	73,3	80,6	90,2	97,6	110,1	120,9
61,5	72,9	79,9	87,8	98,1	106,0	119,8	131,5
61,9	73,7	80,8	88,7	99,0	107,3	121,1	132,9
0,090	0,075	0,066	0,061	0,054	0,049	0,043	0,042
0,071	0,077	0,065	0,069	0,049	0,046	0,041	0,041
0,114	0,097	0,086	0,080	0,069	0,062	0,056	0,054
0,083	0,095	0,082	0,086	0,058	0,055	0,049	0,049
0,039	0,031	0,028	0,026	0,022	0,019	0,012	0,017
0,040	0,032	0,026	0,027	0,023	0,021	0,020	0,018
0,031	0,031	0,024	0,027	0,019	0,018	0,016	0,016
0,050	0,042	0,038	0,034	0,029	0,026	0,017	0,022
0,052	0,043	0,035	0,036	0,030	0,027	0,026	0,023
0,040	0,042	0,032	0,037	0,025	0,023	0,022	0,021
0,010	0,009	0,008	0,007	0,006	0,006	0,010	0,005
0,016	0,013	0,011	0,011	0,009	0,009	0,008	0,007
0,019	0,017	0,013	0,015	0,012	0,001	0,010	0,010

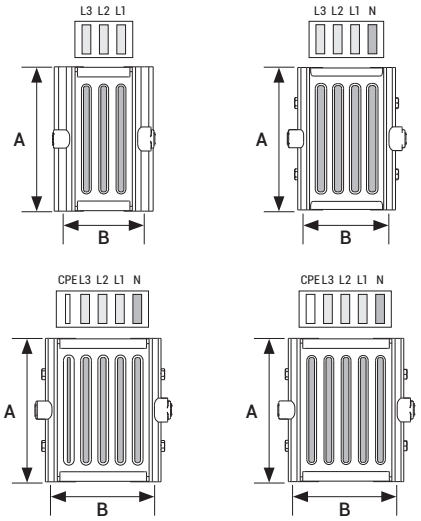

Voltage Drop Calculation

Generally Voltage drop of a busbar system can be calculated with the following formula.

$$\Delta U = \sqrt{3}.L.I.(R_1.\cos\varphi + X_1.\sin\varphi)\ 10^{-3}\ [V]$$

ΔU	= Voltage Drop (V)
L	= Line Length (m)
I	= Line Current or Load (A)
R_1	= Resistance (mΩ/m)
X_1	= Reactance (mΩ/m)
Cosφ	= Power Factor

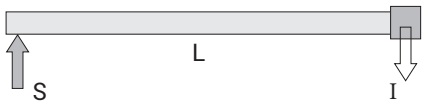

S = Supply Point

(1) All phase conductor characteristics have been determined according to Annex BB of IEC 61439-6.

(2) Fault-loop zero-sequences impedances have been determined according to Annex CC of IEC 61439-6.

(3) Fault-loop resistances and reactances have been determined according to Annex DD of IEC 61439-6.

*IK10 corresponds to impact energy of 50J according to IEC 62262.

** Cast Resin Busbars are produced with a minimum of 3 conductors.

E-LINE CCR

▶▶Technical Characteristics

Copper Conductor (Cu)

Rated Current	I_n	A	650	850	1000	1250	1600	2000
Busbar Code			06	08	10	12	16	20
Standards	IEC 61439-6:2012 Ed.1 IEC 61439-1 Ed.2:2011, TS EN 61439-1: 2011							
Rated Operational Voltage	U_e	V	1000	1000	1000	1000	1000	1000
Rated Isolation Voltage	U_i	V_{ac}	1000	1000	1000	1000	1000	1000
Rated Impulse Withstand Voltage	U_{imp}	kV	12	12	12	12	12	12
Rated Frequency	f	Hz	50 / 60	50 / 60	50 / 60	50 / 60	50 / 60	50 / 60
Pollution Degree			III	III	III	III	III	III
Protection Degree	IP 68		IP 68	IP 68	IP 68	IP 68	IP 68	IP 68
External Mechanical Impacts (IK Code)*	50J, >IK10		50J, >IK10	50J, >IK10	50J, >IK10	50J, >IK10	50J, >IK10	50J, >IK10
Rated Short-time Withstand Current (1s - 3 phase)	I_{cw}	kA	35	35	50	80	80	80
Rated Peak Withstand Current	I_{pk}	kA	73,5	73,5	105	176	176	176
Rated Short-time Withstand Current for Neutral Conductor (1s) (Single phase)	I_{cw}	kA	21	21	30	48	48	48
Rated Peak Withstand Current for Neutral Conductor (Phase-Neutral)	I_{pk}	kA	44,1	44,1	63	100,8	100,8	100,8
Rated Short-time Withstand Current for PE (Housing-Phase) Conductor	I_{cw}	kA	21	21	30	48	48	48
Rated Peak Withstand Current for PE (Housing-Phase) Conductor	I_{pk}	kA	44,1	44,1	63	100,8	100,8	100,8
PHASE CONDUCTOR CHARACTERISTICS (In)								
Resistance at a conductor temperature of 20 °C	R_{20}	mΩ/m	0,0755	0,0648	0,0534	0,0358	0,0256	0,0198
Resistance at an ambient air temperature of 35 °C	R	mΩ/m	0,1055	0,0890	0,0727	0,0473	0,0345	0,0263
Reactance (Independent from Temperature)	X	mΩ/m	0,313	0,0281	0,0246	0,0180	0,0132	0,0097
Positive and negative sequence impedances at an ambient air temperature of 35°C	Z	mΩ/m	0,1101	0,0934	0,0768	0,0506	0,0369	0,0281
Positive and negative sequence impedances at an ambient air temperature of 20°C	Z_{20}	mΩ/m	0,0817	0,0706	0,0588	0,0401	0,0288	0,0221
Rated Power Loss at 35°C		W/m	149,8	190,8	212,3	219,5	269,7	304,9
DC Resistance at a conductor temperature of 20°C for Phases	$R_{ph(dc)}$	mΩ/m	0,072	0,065	0,053	0,035	0,026	0,019
DC Resistance at a conductor temperature of 20°C for Neutral	$R_{N(dc)}$	mΩ/m	0,072	0,065	0,053	0,035	0,026	0,019
DC Resistance at a conductor temperature of 20°C for PE	$R_{PE(dc)}$	mΩ/m	0,095	0,068	0,053	0,040	0,031	0,033
SECTIONS								
L1, L2, L3 (Phase Conductor)		mm²	240	270	330	480	660	900
Neutral		mm²	240	270	330	480	660	900
PE (Aluminium Housing)		mm²	1179	1261	1261	1784	1984	2379
Conductor Dimensions		mmxmm	6x40	6x45	6x55	6x80	6x110	6x150
Busbar Weight (3 conductors)		kg/m	16,8	19,6	20,8	27,2	35,4	46,7
Busbar Weight (4 conductors)		kg/m	18,5	21,4	23,3	30,8	40,7	53,6
Busbar Weight (4,5 conductors)		kg/m	20,3	23,6	25,6	34,0	44,8	59,5
Busbar Weight (5 conductors)		kg/m	21,2	24,7	26,7	35,7	47,1	62,3
MEAN FAULT-LOOP CHARACTERISTICS								
Zero-sequence Impedance								
Zero-sequence impedance at a conductor temperature of 20°C (Phase-Neutral)	$Z_{(0)b20phN}$	mΩ/m	0,381	0,336	0,280	0,194	0,146	0,108
Zero-sequence impedance at a conductor temperature of 20°C (Phase-Housing)	$Z_{(0)b20phPE}$	mΩ/m	0,272	0,279	0,267	0,196	0,155	0,122
Zero-sequence impedance at an ambient temperature of 35°C (Phase-Neutral)	$Z_{(0)bphN}$	mΩ/m	0,507	0,439	0,360	0,243	0,186	0,136
Zero-sequence impedance at an ambient temperature of 35°C (Phase-Housing)	$Z_{(0)bphPE}$	mΩ/m	0,335	0,337	0,329	0,232	0,187	0,145
Mean Resistances and Reactances								
Resistance at a conductor temperature of 20°C	$R_{b20phph}$	mΩ/m	0,157	0,136	0,110	0,074	0,055	0,041
Resistance at a conductor temperature of 20°C	R_{b20phN}	mΩ/m	0,163	0,141	0,114	0,078	0,059	0,043
Resistance at a conductor temperature of 20°C	$R_{b20phPE}$	mΩ/m	0,119	0,111	0,107	0,072	0,056	0,043
Resistance at an ambient air temperature of 35°C	R_{bphph}	mΩ/m	0,220	0,187	0,150	0,098	0,075	0,055
Resistance at an ambient air temperature of 35°C	R_{bphN}	mΩ/m	0,227	0,194	0,156	0,103	0,079	0,057
Resistance at an ambient air temperature of 35°C	R_{bphPE}	mΩ/m	0,167	0,153	0,145	0,095	0,076	0,057
Reactance (Independent from temperature)	X_{bphph}	mΩ/m	0,058	0,053	0,046	0,033	0,025	0,019
Reactance (Independent from temperature)	X_{bphN}	mΩ/m	0,081	0,075	0,065	0,048	0,036	0,026
Reactance (Independent from temperature)	X_{bphPE}	mΩ/m	0,081	0,083	0,070	0,054	0,043	0,034

Attention! The standard mounting of the Cast Resin busbar is with the conductors on edge.
This allows for the easy application of the resin at the joint.

2500	3200	3400	4000	4500	5000	5750	6300
25	32	34	40	45	50	57	63
1000	1000	1000	1000	1000	1000	1000	1000
1000	1000	1000	1000	1000	1000	1000	1000
12	12	12	12	12	12	12	12
50 / 60	50 / 60	50 / 60	50 / 60	50 / 60	50 / 60	50 / 60	50 / 60
III	III	III	III	III	III	III	III
IP 68	IP 68	IP 68	IP 68	IP 68	IP 68	IP 68	IP 68
50J, >IK10	50J, >IK10	50J, >IK10	50J, >IK10	50J, >IK10	50J, >IK10	50J, >IK10	50J, >IK10
100	100	120	120	120	120	120	120
220	220	264	264	264	264	264	264
60	60	72	72	72	72	72	72
132	132	158,4	158,4	158,4	158,4	158,4	158,4
60	60	72	72	72	72	72	72
132	132	158,4	158,4	158,4	158,4	158,4	158,4
0,0181	0,0133	0,0120	0,0107	0,0086	0,0080	0,0063	0,0057
0,0242	0,0180	0,0160	0,0145	0,0112	0,0106	0,0082	0,0075
0,0084	0,0066	0,0057	0,0053	0,0044	0,0038	0,0030	0,0028
0,0256	0,0192	0,0169	0,0154	0,0120	0,0112	0,0088	0,0080
0,0200	0,0148	0,0132	0,0119	0,0097	0,0088	0,0070	0,0063
447,9	538	543,1	674,3	648	782,6	776,2	843,9
0,018	0,013	0,011	0,010	0,007	0,007	0,006	0,005
0,018	0,013	0,011	0,010	0,007	0,007	0,006	0,005
0,022	0,018	0,017	0,017	0,017	0,016	0,016	0,013
960	1320	1500	1680	2160	2250	2880	3240
960	1320	1500	1680	2160	2250	2880	3240
3568	3698	4430	4569	5010	6645	7137	7515
2(6x80)	2(6x110)	2(6x125)	2(6x140)	2(6x180)	3(6x125)	3(6x160)	3(6x180)
54,3	70,9	79,1	87,8	109,1	118,6	148,1	163,6
61,6	81,3	91,0	100,4	126,2	136,3	170,9	189,3
68,0	89,5	100,3	111,4	139,5	150,5	188,7	209,2
71,4	94,2	105,7	117,3	147,0	158,5	198,6	220,4
0,100	0,074	0,067	0,059	0,049	0,040	0,035	0,031
0,102	0,081	0,085	0,064	0,069	0,044	0,040	0,038
0,127	0,094	0,084	0,075	0,060	0,051	0,043	0,040
0,121	0,096	0,103	0,076	0,082	0,052	0,047	0,044
0,038	0,027	0,025	0,021	0,018	0,017	0,013	0,012
0,041	0,029	0,026	0,023	0,019	0,018	0,014	0,012
0,037	0,028	0,029	0,022	0,024	0,016	0,014	0,013
0,051	0,037	0,033	0,029	0,023	0,022	0,017	0,015
0,054	0,039	0,035	0,031	0,025	0,023	0,018	0,016
0,049	0,037	0,039	0,030	0,031	0,022	0,018	0,017
0,016	0,012	0,011	0,010	0,008	0,007	0,006	0,005
0,024	0,018	0,016	0,015	0,012	0,011	0,008	0,008
0,027	0,022	0,021	0,017	0,016	0,013	0,011	0,010

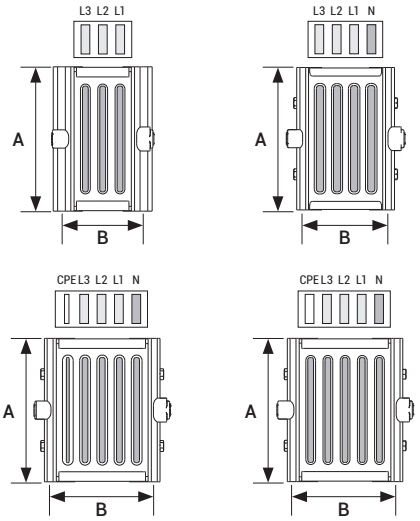

Voltage Drop Calculation

Generally Voltage drop of a busbar system can be calculated with the following formula.

$$\Delta U = \sqrt{3}.L.I.(R_1.\cos\varphi + X_1.\sin\varphi)\ 10^{-3}\ [V]$$

ΔU	= Voltage Drop (V)
L	= Line Length (m)
I	= Line Current or Load (A)
R_1	= Resistance (mΩ/m)
X_1	= Reactance (mΩ/m)
Cosφ	= Power Factor

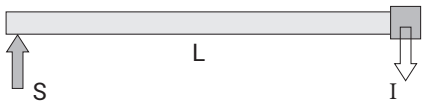

S = Supply Point

(1) All phase conductor characteristics have been determined according to Annex BB of IEC 61439-6.

(2) Fault-loop zero-sequences impedances have been determined according to Annex CC of IEC 61439-6.

(3) Fault-loop resistances and reactances have been determined according to Annex DD of IEC 61439-6.

*IK10 corresponds to impact energy of 50J according to IEC 62262.

** Cast Resin Busbars are produced with a minimum of 3 conductors.

E-LINE CCR

▶▶Order Code System

EAE ELEKTRİK

CCR	C	12	8	04	-	B	-	STD

- BUSBAR
- CONDUCTOR MATERIAL
- BUSBAR CODE
- PROTECTION DEGREE
- CONDUCTOR CONFIGURATION
- BUSBAR TYPE
- COMPONENT

Busbar Type — BUSBAR TYPE

Aluminium (Al) A
Copper (Cu) C — CONDUCTOR MATERIAL

CCRA - Al Conductor		CCRC - Cu Conductor		Conductor Cross Section
Rated Current	Busbar Kodu	Rated Current	Busbar Kodu	
600	06	650	06	6x40
-	-	850	08	6x45
-	-	1000	10	6x55
800	09	1250	12	6x80
1000	10	-	-	6x95
1250	12	1600	16	6x110
-	-	2000	20	6x150
1600	16	-	-	6x160
2000	21	-	-	6x230
-	-	2500	25	2(6x80)
-	-	3200	32	2(6x110)
-	-	3400	34	2(6x125)
2500	25	-	-	2(6x130)
-	-	4000	40	2(6x140)
3000	31	-	-	2(6x160)
3300	33	4500	45	2(6x180)
3600	37	-	-	2(6x200)
4000	41	-	-	2(6x230)
4500	44	-	-	2(6x250)
-	-	5000	50	3(6x125)
-	-	5750	57	3(6x160)
5000	50	6300	63	3(6x180)
5400	54	-	-	3(6x200)

BUSBAR CODE

IP68 8 — PROTECTION DEGREE

Number of Conductors	Code	Conductor Configuration								
		L1	L2	L3	N	Earth	½ Earth	Clean Earth	½ Clean Earth	Earth (Hosing)
3 Conductor	03	√	√	√						√
4 Conductor	04	√	√	√	√					√
4 ½ Conductor	08	√	√	√	√				√	√
5 Conductor	09	√	√	√	√			√		√

* TYPE	Utilisation Type
(B) Bolt-on	Where there is no need for tap off boxes, power is is supplied from one point to the other end point of the line.

COMPONENT

Standard Straight Length ..... STD
Special Straight Length X

Upwards Elbow ..... U
Downwards Elbow ..... D
Left Elbow L
Right Elbow ..... R

Left Horizontal Offset ..... LH
Right Horizontal Offset ..... RH
Upwards Vertical Offset ..... UV
Downwards Vertical Offset ..... DV
Upwards Left Combined Offset ..... KUL
Upwards Right Combined Offset ..... KUR
Downwards Left Combined Offset ..... KDL
Downwards Right Combined Offset ..... KDR
Left Upwards Combined Offset ..... KLU
Right Upwards Combined Offset ..... KRU
Left Downwards Combined Offset ..... KLD
Right Downwards Combined Offset ..... KRD

End Closure S10
End Closure S11

Reduction ..... RD
Crossing Module ..... CCRKX
Crossing Module ..... KXCCR

Right Side Feeder "T" ..... TYR
Left Side Feeder "T" ..... TYL
Central Feeder "T" Module ..... TO

Horizontal Expansion ..... YDT
Vertical Expansion ..... DDT
Phase Transposition Module ..... FDM

Panel/Transformer Con. ..... P10 / TR10
Panel/Transformer Con. ..... P11 / TR11
Upwards Panel/Transformer Con. ..... PU20 / TU20
Upwards Panel/Transformer Con. ..... PU21 / TU21
Downwards Panel/Transformer Con. ..... PD20 / TD20
Downwards Panel/Transformer Con. ..... PD21 / TD21
Right Panel/Transformer Con. ..... PR30 / TR30
Right Panel/Transformer Con. ..... PR31 / TR31
Left Panel/Transformer Con. ..... PL30 / TL30
Left Panel/Transformer Con. ..... PL31 / TL31
Horizontal Panel/Transformer Con. ..... P40 / TR40
Horizontal Panel/Transformer Con. ..... P41 / TR41
Transformer Connection TR61

E-LINE CCR

▶▶Standard Straight Length

Standard Feeder Straight Length - STD

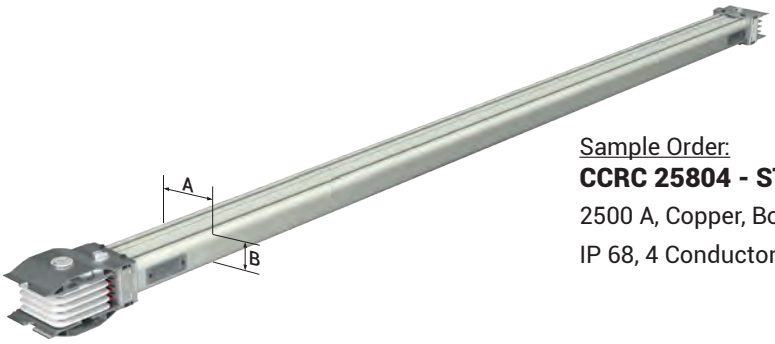

Sample Order:

CCRC 25804 - STD

2500 A, Copper, Bolt-on,

IP 68, 4 Conductor

Application Areas:

- Between Transformer - Panel Applications
- Between Panel to Panel Applications
- Generator and Compensation
- Panels Feeding

Special Straight Length - X

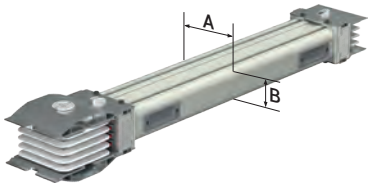

Special Straight Length in (mm)

Sample Order:

CCRC 25804 - X - 147

2500 A, Copper, Bolt-on,
IP 68, 4 Conductor, 1470 mm
Special Straight Length

Application Areas:

- Between Transformer - Panel Applications
- Between Panel to Panel Applications
- Generator and Compensation
- Panels Feeding

information:

Feeder Minimum Midsize = 450 mm

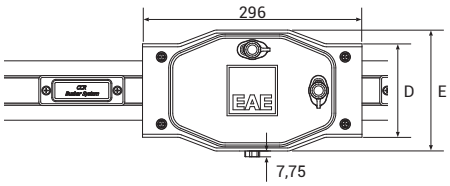

Number of Conductors	3 - 4 Conductor	4½ - 5 Conductor
D (mm)	126	144
E (mm)	163	181

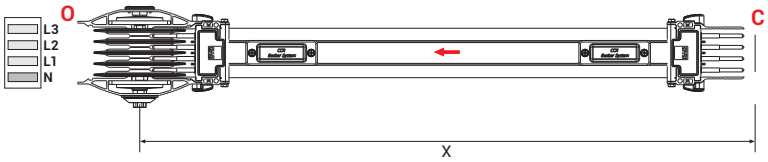

Table For Outer Dimension of Busbars

CCRA - Al Conductor	Rated Current	600	-	-	800	1000	1250	-	1600	2000	-	-	-	2500	-	3000	3300	3600	4000	4500	-	-	5000	5400
	Busbar Code	06	-	-	09	10	12	-	16	21	-	-	-	25	-	31	33	37	41	44	-	-	50	54
CCRC - Cu Conductor	Rated Current	650	850	1000	1250	-	1600	2000	-	-	2500	3200	3400	-	4000	-	4500	-	-	-	5000	5750	6300	-
	Busbar Code	06	08	10	12	-	16	20	-	-	25	32	34	-	40	-	45	-	-	-	50	57	63	-
A	(mm)	70	75	85	110	125	140	180	190	260	230	290	320	330	350	390	430	470	530	570	485	590	650	710

Number of Conductors	3 Conductor	4 Conductor	4 ½ Conductor	5 Conductor
B (mm)	73	80	87	87

Attention ! The standard mounting of the Cast Resin busbar is with the conductors on edge. This allows for the easy application of the resin at the joint.

■ The dimensions given above are minimum values. ■ Please call us for non-standard components.

E-LINE CCR

▶▶Elbows

Upwards Elbow - U

Sample Order:
CCRC 32804 - B - U
3200 A, Copper, Bolt-on,
IP 68, 4 Conductor

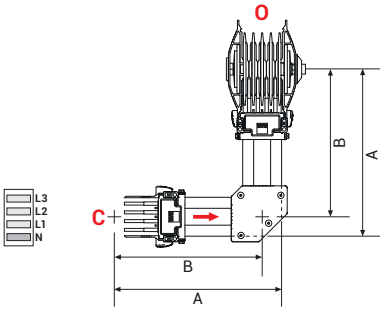

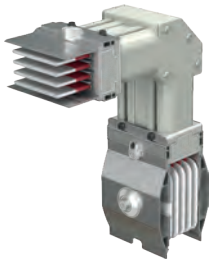

Downwards Elbow - D

Sample Order:
CCRC 32804 - B - D
3200 A, Copper, Bolt-on,
IP 68, 4 Conductor

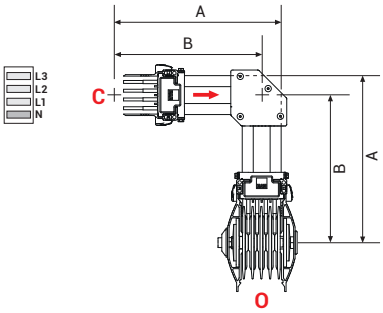

Conductor Dimension Table

Number of Conductors	3	4	4½	5
A (mm)	337	344	351	351
B (mm)	300	304	307	307

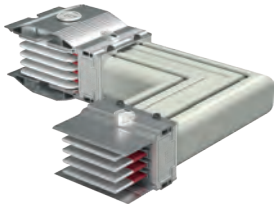

Left Elbow - L

Sample Order:
CCRC 32804 - B - L
3200 A, Copper, Bolt-on,
IP 68, 4 Conductor

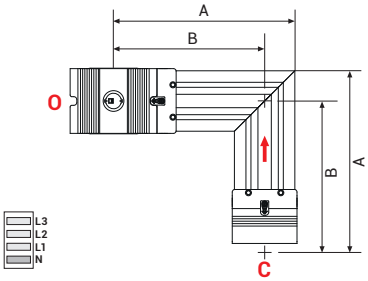

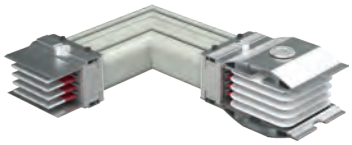

Right Elbow - R

Sample Order:
CCRC 32804 - B - R
3200 A, Copper, Bolt-on,
IP 68, 4 Conductor

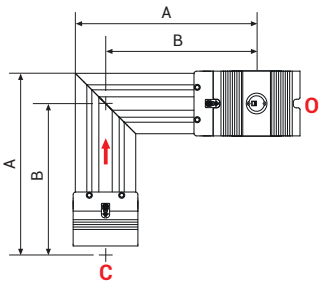

Table For Outer Dimension of Busbars

CCRA - Al Conductor	Rated Current	600	-	-	800	1000	1250	-	1600	2000	-	-	-	2500	-	3000	3300	3600	4000	4500	-	-	5000	5400
	Busbar Code	06	-	-	09	10	12	-	16	21	-	-	-	25	-	31	33	37	41	44	-	-	50	54
CCRC - Cu Conductor	Rated Current	650	850	1000	1250	-	1600	2000	-	-	2500	3200	3400	-	4000	-	4500	-	-	-	5000	5750	6300	-
	Busbar Code	06	08	10	12	-	16	20	-	-	25	32	34	-	40	-	45	-	-	-	50	57	63	-
A	(mm)	310	315	325	350	365	380	420	430	500	470	530	560	570	590	630	670	710	770	810	725	830	890	950
B	(mm)	275	278	283	295	303	310	330	335	370	355	385	400	405	415	435	455	475	505	525	483	535	565	595

■ The dimensions given above are minimum values. ■ Please call us for non-standard components. ■ The angle tolerance in the elbow modules are ±2 degrees.

E-LINE CCR

▶▶Elbows

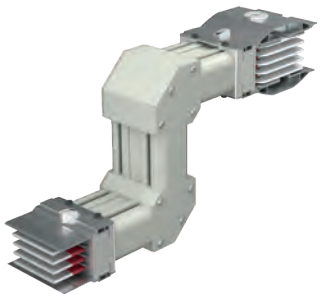

Upwards Vertical Offset - UV

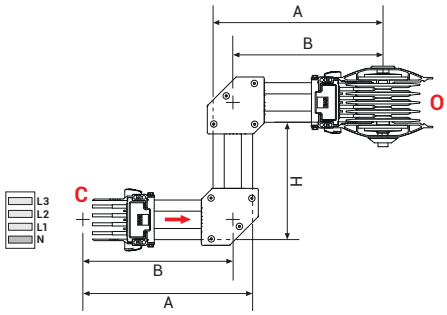

Sample Order:

CCRC 32804 - B - UV

H= 60cm, 3200 A, Copper, Bolt-on, IP 68, 4 Conductor

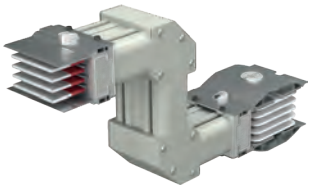

Downwards Vertical Offset - DV

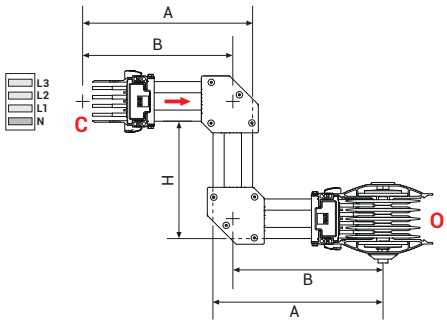

Sample Order:

CCRC 32804 - B - DV

H= 60cm, 3200 A, Copper, Bolt-on, IP 68, 4 Conductor

Conductor Dimension Table

Number of Conductors	3	4	4½	5
A (mm)	337	344	351	351
B (mm)	300	304	307	307
H (mm)	231	238	245	245
H max.	601	608	615	615

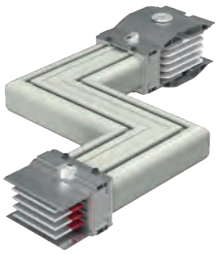

Left Horizontal Offset - LH

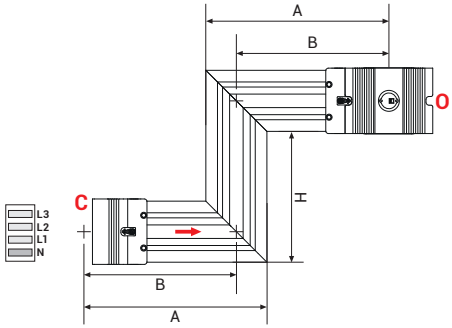

Sample Order:

CCRC 32804 - B - LH

H= 60cm, 3200 A, Copper, Bolt-on, IP 68, 4 Conductor

H min= 280mm

Right Horizontal Offset - RH

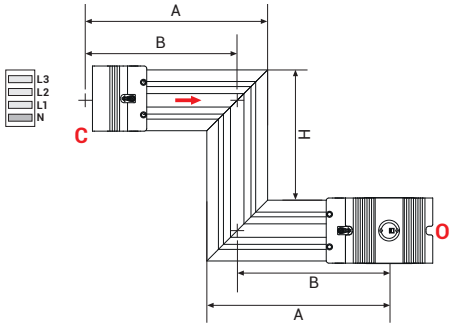

Sample Order:

CCRC 32804 - B - RH

H= 60cm, 3200 A, Copper, Bolt-on, IP 68, 4 Conductor

H min= 280mm

Table For Outer Dimension of Busbars

CCRA - Al Conductor	Rated Current	600	-	-	800	1000	1250	-	1600	2000	-	-	-	2500	-	3000	3300	3600	4000	4500	-	-	5000	5400
	Busbar Code	06	-	-	09	10	12	-	16	21	-	-	-	25	-	31	33	37	41	44	-	-	50	54
CCRC - Cu Conductor	Rated Current	650	850	1000	1250	-	1600	2000	-	-	2500	3200	3400	-	4000	-	4500	-	-	-	5000	5750	6300	-
	Busbar Code	06	08	10	12	-	16	20	-	-	25	32	34	-	40	-	45	-	-	-	50	57	63	-
A	(mm)	310	315	325	350	365	380	420	430	500	470	530	560	570	590	630	670	710	770	810	725	830	890	950
B	(mm)	275	278	283	295	303	310	330	335	370	355	385	400	405	415	435	455	475	505	525	483	535	565	595
H max.	(mm)	550	555	565	590	605	620	660	670	740	710	770	800	810	830	870	910	950	1010	1050	965	1070	1130	1190

■ The dimensions given above are minimum values. ■ Please call us for non-standard components. ■ The angle tolerance in the elbow modules are ±2 degrees.

E-LINE CCR

▶▶Elbows

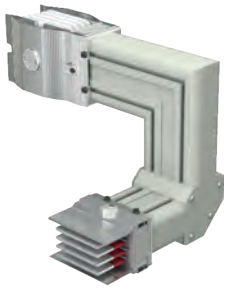

Upwards Left Combined Offset - KUL

Sample Order:
CCRC 32804 - B - KUL
3200 A, Copper, Bolt-on,
IP 68, 4 Conductor

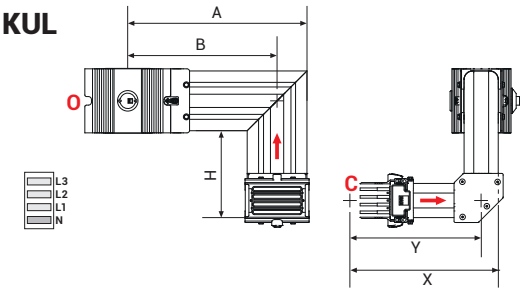

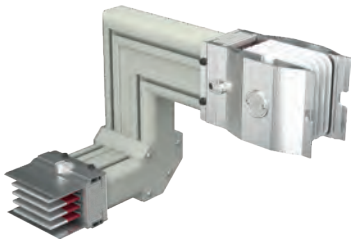

Upwards Right Combined Offset - KUR

Sample Order:
CCRC 32804 - B - KUR
3200 A, Copper, Bolt-on,
IP 68, 4 Conductor

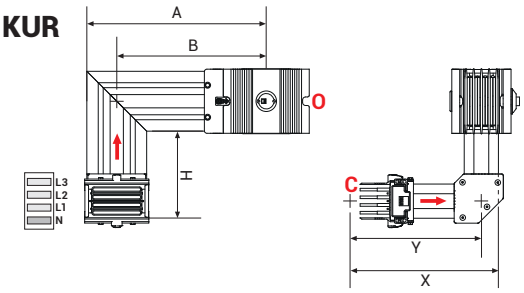

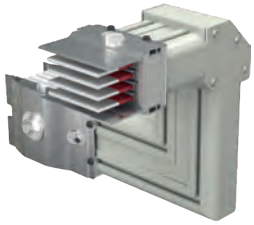

Downwards Left Combined Offset - KDL

Sample Order:
CCRC 32804 - B - KDL
3200 A, Copper, Bolt-on,
IP 68, 4 Conductor

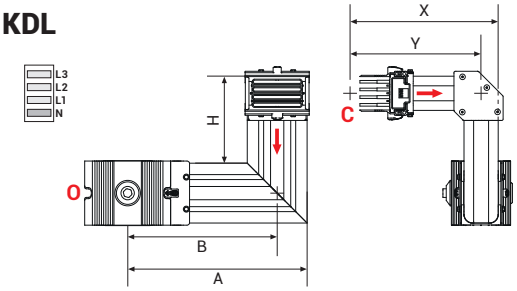

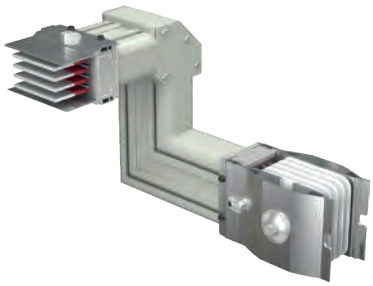

Downwards Right Combined Offset - KDR

Sample Order:
CCRC 32804 - B - KDR
3200 A, Copper, Bolt-on,
IP 68, 4 Conductor

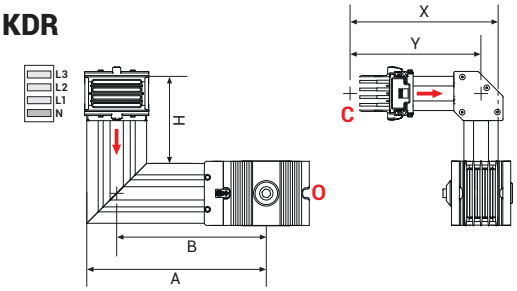

Conductor Dimension Table

Number of Conductors	3	4	4½	5
X (mm)	337	344	351	351
Y (mm)	300	304	307	307
H (mm)	207	214	221	221
H max.	577	584	591	591

Table For Outer Dimension of Busbars

CCRA - Al Conductor	Rated Current	600	-	-	800	1000	1250	-	1600	2000	-	-	-	2500	-	3000	3300	3600	4000	4500	-	-	5000	5400
	Busbar Code	06	-	-	09	10	12	-	16	21	-	-	-	25	-	31	33	37	41	44	-	-	50	54
CCRC - Cu Conductor	Rated Current	650	850	1000	1250	-	1600	2000	-	-	2500	3200	3400	-	4000	-	4500	-	-	-	5000	5750	6300	-
	Busbar Code	06	08	10	12	-	16	20	-	-	25	32	34	-	40	-	45	-	-	-	50	57	63	-
A	(mm)	310	315	325	350	365	380	420	430	500	470	530	560	570	590	630	670	710	770	810	725	830	890	950
B	(mm)	275	278	283	295	303	310	330	335	370	355	385	400	405	415	435	455	475	505	525	483	535	565	595

■ The dimensions given above are minimum values. ■ Please call us for non-standard components. ■ The angle tolerance in the elbow modules are ±2 degrees.

E-LINE CCR

▶▶Elbows

Left Upwards Combined Offset - KLU

Sample Order:
CCRC 32804 - B - KLU
3200 A, Copper, Bolt-on, IP 68, 4 Conductor

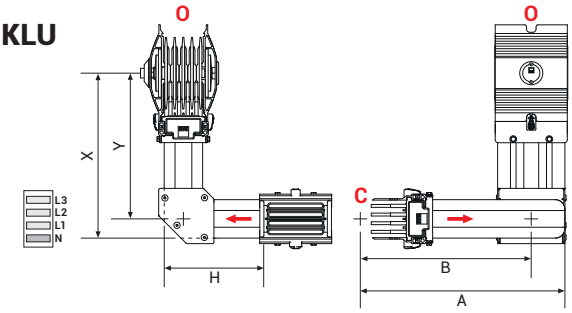

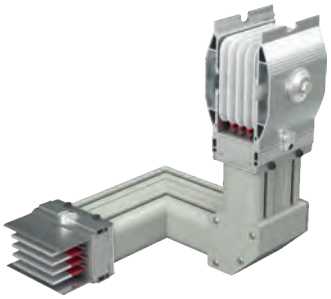

Right Upwards Combined Offset - KRU

Sample Order:
CCRC 32804 - B - KRU
3200 A, Copper, Bolt-on, IP 68, 4 Conductor

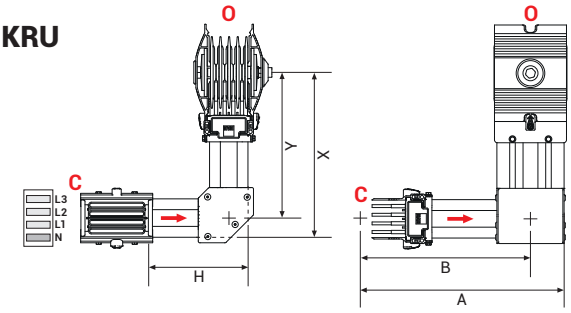

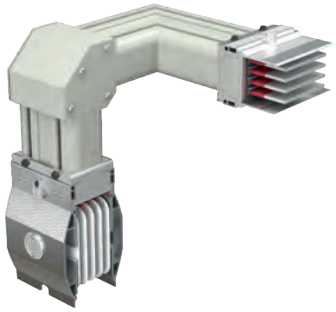

Left Downwards Combined Offset - KLD

Sample Order:
CCRC 32804 - B - KLD
3200 A, Copper, Bolt-on, IP 68, 4 Conductor

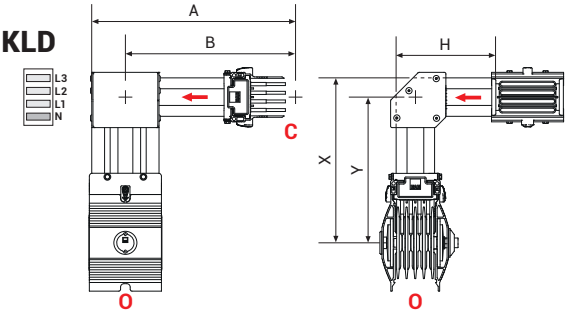

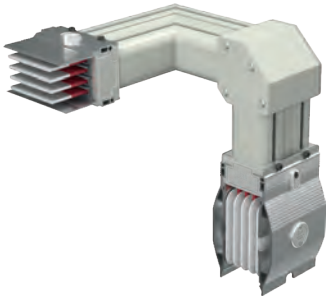

Right Downwards Combined Offset - KRD

Sample Order:
CCRC 32804 - B - KRD
3200 A, Copper, Bolt-on, IP 68, 4 Conductor

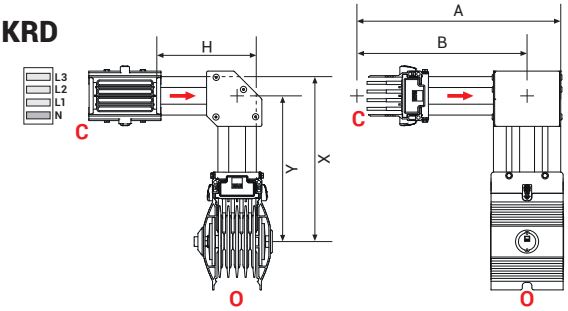

Conductor Dimension Table

Number of Conductors	3	4	4½	5
X (mm)	337	344	351	351
Y (mm)	300	304	307	307
H (mm)	207	214	221	221
H max.	577	584	591	591

Table For Outer Dimension of Busbars

CCRA - Al Conductor	Rated Current	600	-	-	800	1000	1250	-	1600	2000	-	-	-	2500	-	3000	3300	3600	4000	4500	-	-	5000	5400
	Busbar Code	06	-	-	09	10	12	-	16	21	-	-	-	25	-	31	33	37	41	44	-	-	50	54
CCRC - Cu Conductor	Rated Current	650	850	1000	1250	-	1600	2000	-	-	2500	3200	3400	-	4000	-	4500	-	-	-	5000	5750	6300	-
	Busbar Code	06	08	10	12	-	16	20	-	-	25	32	34	-	40	-	45	-	-	-	50	57	63	-
A	(mm)	310	315	325	350	365	380	420	430	500	470	530	560	570	590	630	670	710	770	810	725	830	890	950
B	(mm)	275	278	283	295	303	310	330	335	370	355	385	400	405	415	435	455	475	505	525	483	535	565	595

■ The dimensions given above are minimum values. ■ Please call us for non-standard components. ■ The angle tolerance in the elbow modules are ±2 degrees.

E-LINE CCR

▶▶Elbows

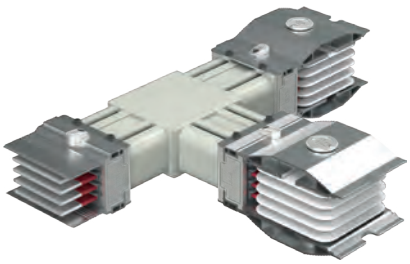

Right "T" Module - TYR

Sample Order:

CCRC 32804 - B - TYR

3200 A, Copper, Bolt-on,
IP 68, 4 Conductor

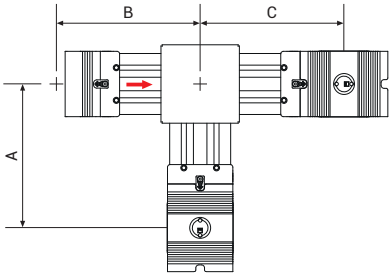

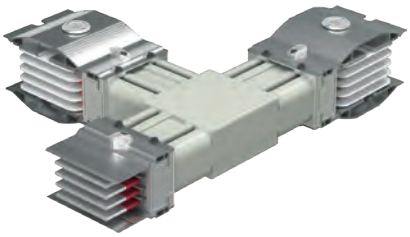

Left "T" Module - TYL

Sample Order:

CCRC 32804 - B - TYL

3200 A, Copper, Bolt-on,
IP 68, 4 Conductor

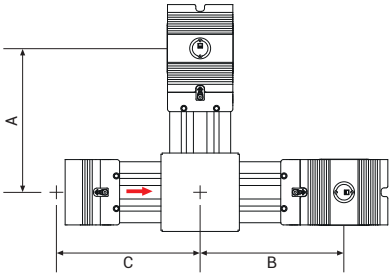

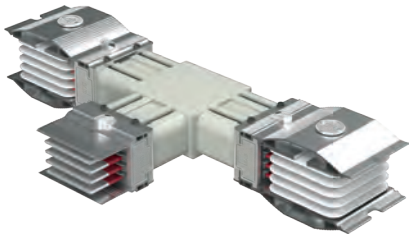

Central Feeder "T" Module - TO

Sample Order:

CCRC 32804 - B - TO

3200 A, Copper, Bolt-on,
IP 68, 4 Conductor

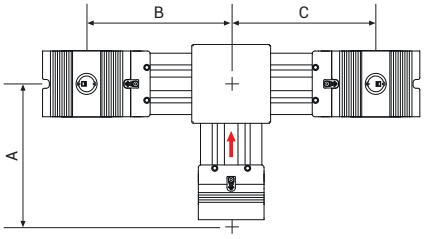

Table For Outer Dimension of Busbars

CCRA - Al Conductor	Rated Current	600	-	-	800	1000	1250	-	1600	2000	-	-	-	2500	-	3000	3300	3600	4000	4500	-	-	5000	5400
	Busbar Code	06	-	-	09	10	12	-	16	21	-	-	-	25	-	31	33	37	41	44	-	-	50	54
CCRC - Cu Conductor	Rated Current	650	850	1000	1250	-	1600	2000	-	-	2500	3200	3400	-	4000	-	4500	-	-	-	5000	5750	6300	-
	Busbar Code	06	08	10	12	-	16	20	-	-	25	32	34	-	40	-	45	-	-	-	50	57	63	-
A	(mm)	275	278	283	295	303	310	330	335	370	355	385	400	405	415	435	455	475	505	525	483	535	565	595
B	(mm)	275	278	283	295	303	310	330	335	370	355	385	400	405	415	435	455	475	505	525	483	535	565	595
C	(mm)	275	278	283	295	303	310	330	335	370	355	385	400	405	415	435	455	475	505	525	483	535	565	595

■ The dimensions given above are minimum values. ■ Please call us for non-standard components. ■ The angle tolerance in the elbow modules are ±2 degrees.

E-LINE CCR

▶▶Standard Modules

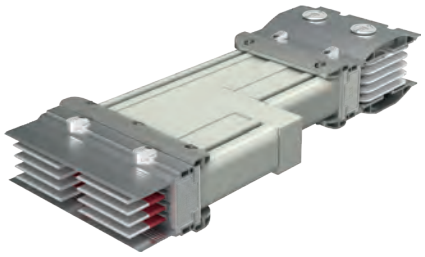

Reduction Modules - RD

Sample Order:

CCRC 32804 - B - RD

3200 A, Copper, Bolt-on,
IP 68, 4 Conductor

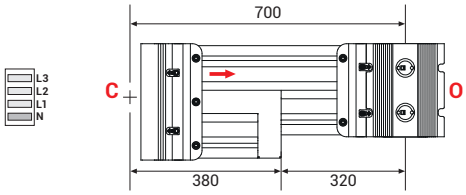

Phase Transposition Module - FDM

Sample Order:

CCRC 32804- B - FDM

3200 A, Copper, Bolt-on,
IP 68, 4 Conductor

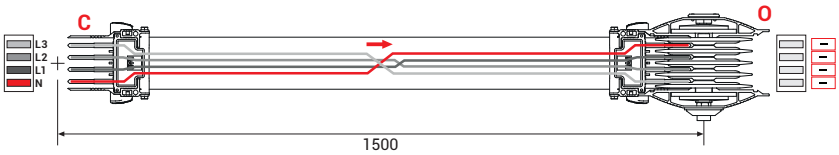

■ The dimensions given above are minimum values. ■ Please call us for non-standard components.

E-LINE CCR

▶▶Standard Modules

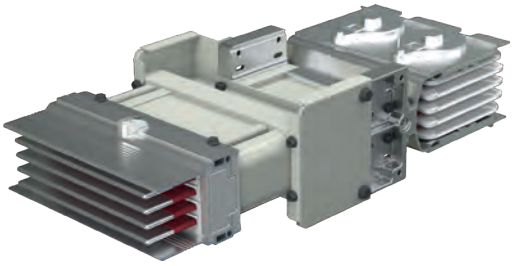

CCR - KX
Crossing Module

- CCRKX

Sample Order:
CCRC 16804- B - CCRKX
1600 A, Copper, Bolt-on,
IP 68, 4 Conductor

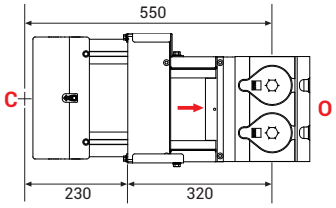

KX - CCR
Crossing Module

- KXCCR

Sample Order:
CCRC 16804- B - KXCCR
1600 A, Copper, Bolt-on,
IP 68, 4 Conductor

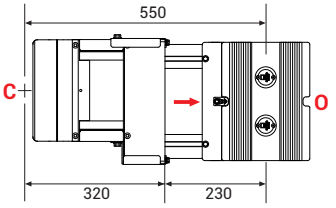

CCR-A RATED CURRENT		KX-A BUSBAR CODE																				
		04	05	06	08	11	10	12	14	16	17	18	20	29	27	25	32	33	40	41	51	60
600	06	✓	✓	✓	-	-	-	-	-	-	-	-	-	-	-	-	-	-	-	-	-	-
800	09	-	-	-	✓	-	-	-	-	-	-	-	-	-	-	-	-	-	-	-	-	-
1000	10	-	-	-	-	✓	✓	-	-	-	-	-	-	-	-	-	-	-	-	-	-	-
1250	12	-	-	-	-	-	-	✓	-	-	-	-	-	-	-	-	-	-	-	-	-	-
1600	16	-	-	-	-	-	-	-	✓	✓	✓	-	-	-	-	-	-	-	-	-	-	-
2000	21	-	-	-	-	-	-	-	-	-	-	✓	✓	-	-	-	-	-	-	-	-	-
2500	25	-	-	-	-	-	-	-	-	-	-	-	-	✓	✓	✓	-	-	-	-	-	-
3000	31	-	-	-	-	-	-	-	-	-	-	-	-	-	✓	✓	-	-	-	-	-	-
3300	33	-	-	-	-	-	-	-	-	-	-	-	-	-	-	-	✓	✓	-	-	-	-
3600	37	-	-	-	-	-	-	-	-	-	-	-	-	-	-	-	✓	✓	-	-	-	-
4000	41	-	-	-	-	-	-	-	-	-	-	-	-	-	-	-	-	-	✓	✓	-	-
4500	44	-	-	-	-	-	-	-	-	-	-	-	-	-	-	-	-	-	-	✓	-	-
5000	50	-	-	-	-	-	-	-	-	-	-	-	-	-	-	-	-	-	-	-	✓	-
5400	54	-	-	-	-	-	-	-	-	-	-	-	-	-	-	-	-	-	-	-	-	✓

CCR-C RATED CURRENT		KX-C BUSBAR CODE															
		05	06	08	10	12	14	17	23	25	22	27	32	36	40	50	63
650	06	✓	✓	-	-	-	-	-	-	-	-	-	-	-	-	-	-
850	08	-	-	✓	-	-	-	-	-	-	-	-	-	-	-	-	-
1000	10	-	-	-	✓	-	-	-	-	-	-	-	-	-	-	-	-
1250	12	-	-	-	-	✓	-	-	-	-	-	-	-	-	-	-	-
1600	16	-	-	-	-	-	✓	✓	-	-	-	-	-	-	-	-	-
2000	20	-	-	-	-	-	-	-	✓	-	✓	-	-	-	-	-	-
2500	25	-	-	-	-	-	-	-	-	✓	-	✓	-	-	-	-	-
3200	32	-	-	-	-	-	-	-	-	-	-	-	✓	-	-	-	-
3400	34	-	-	-	-	-	-	-	-	-	-	-	✓	-	-	-	-
4000	40	-	-	-	-	-	-	-	-	-	-	-	-	✓	✓	-	-
4500	45	-	-	-	-	-	-	-	-	-	-	-	-	-	✓	-	-
5000	50	-	-	-	-	-	-	-	-	-	-	-	-	-	-	✓	-
5750	57	-	-	-	-	-	-	-	-	-	-	-	-	-	-	✓	-
6300	63	-	-	-	-	-	-	-	-	-	-	-	-	-	-	-	✓

E-LINE CCR

▶▶Standard Modules

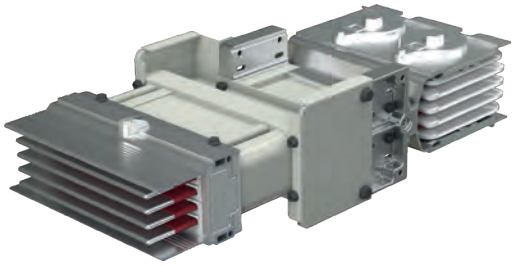

CCR - KX-II
Crossing Module

- CCRCKX-II

Sample Order:
CCRC 16804- B - CCRKX-II
1600 A, Copper, Bolt-on,
IP 68, 4 Conductor

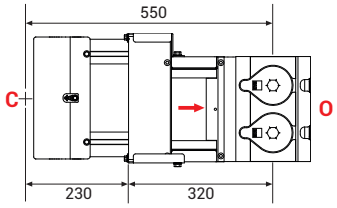

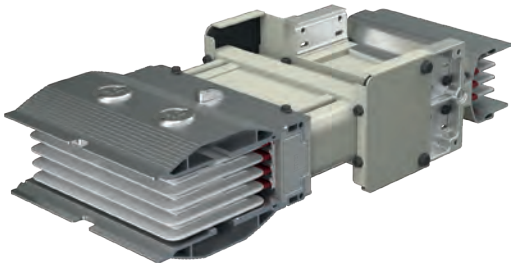

KX-II - CCR
Crossing Module

- KX-IICCRC

Sample Order:
CCRC 16804- B - KX-IICCR
1600 A, Copper, Bolt-on,
IP 68, 4 Conductor

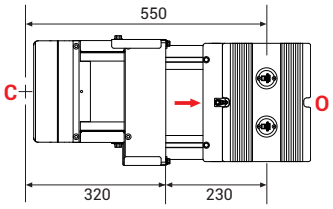

CCR-A RATED CURRENT		KXA-II BUSBAR CODE													
		06	08	10	12	17	20	27	21	25	32	33	40	51	63
600	06	✓	-	-	-	-	-	-	-	-	-	-	-	-	-
800	09	-	✓	-	-	-	-	-	-	-	-	-	-	-	-
1000	10	-	-	✓	-	-	-	-	-	-	-	-	-	-	-
1250	12	-	-	-	✓	-	-	-	-	-	-	-	-	-	-
1600	16	-	-	-	-	✓	-	-	-	-	-	-	-	-	-
2000	21	-	-	-	-	-	✓	-	-	-	-	-	-	-	-
2500	25	-	-	-	-	-	-	✓	✓	✓	-	-	-	-	-
3000	31	-	-	-	-	-	-	-	-	-	✓	-	-	-	-
3300	33	-	-	-	-	-	-	-	-	-	-	✓	-	-	-
3600	37	-	-	-	-	-	-	-	-	-	-	✓	-	-	-
4000	41	-	-	-	-	-	-	-	-	-	-	-	✓	-	-
4500	44	-	-	-	-	-	-	-	-	-	-	-	✓	-	-
5000	50	-	-	-	-	-	-	-	-	-	-	-	-	✓	-
5400	54	-	-	-	-	-	-	-	-	-	-	-	-	✓	✓

CCR-C RATED CURRENT		KXC-II BUSBAR CODE																
		06	08	10	12	14	16	20	21	25	24	28	30	32	36	40	50	63
650	06	✓	-	-	-	-	-	-	-	-	-	-	-	-	-	-	-	-
850	08	-	✓	-	-	-	-	-	-	-	-	-	-	-	-	-	-	-
1000	10	-	-	✓	-	-	-	-	-	-	-	-	-	-	-	-	-	-
1250	12	-	-	-	✓	-	-	-	-	-	-	-	-	-	-	-	-	-
1600	16	-	-	-	-	✓	✓	-	-	-	-	-	-	-	-	-	-	-
2000	20	-	-	-	-	-	-	✓	-	-	-	-	-	-	-	-	-	-
2500	25	-	-	-	-	-	-	-	✓	✓	✓	-	-	-	-	-	-	-
3200	32	-	-	-	-	-	-	-	-	-	-	✓	✓	-	-	-	-	-
3400	34	-	-	-	-	-	-	-	-	-	-	-	-	✓	-	-	-	-
4000	40	-	-	-	-	-	-	-	-	-	-	-	-	-	✓	✓	-	-
4500	45	-	-	-	-	-	-	-	-	-	-	-	-	-	-	✓	-	-
5000	50	-	-	-	-	-	-	-	-	-	-	-	-	-	-	-	✓	-
5750	57	-	-	-	-	-	-	-	-	-	-	-	-	-	-	-	✓	-
6300	63	-	-	-	-	-	-	-	-	-	-	-	-	-	-	-	-	✓

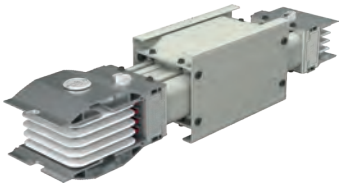

Vertical Expansion Module - DDT

Sample Order:
CCRC 32804 - B - DDT
3200 A, Copper, Bolt-on,
IP 68, 4 Conductor

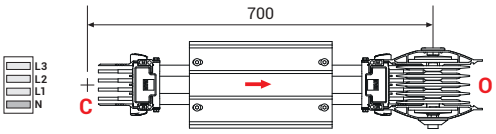

DDT Expansion
- Used for vertical applications in multi storey buildings. One vertical expansion unit is advised to be used at every floor between fixed support points.

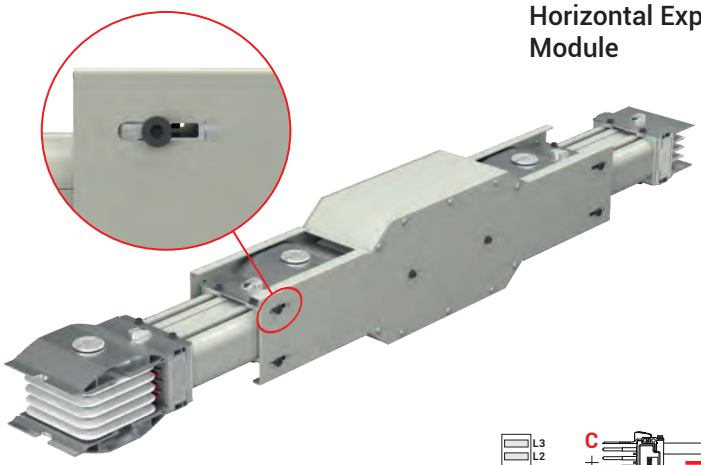

Horizontal Expansion Module - YDT

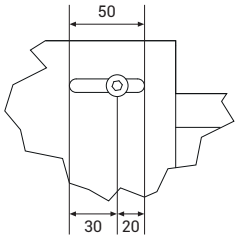

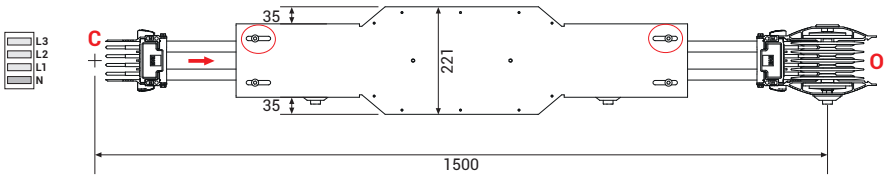

YDT Horizontal Expansion Module
- It is used as a horizontal expansion element every 40m on a long straight run.

Note:
- If the busbar run passes through a horizontal expansion of building, a Dilation Module has to be used.
- Dilation Modules must be used for very long free lines (>75m) that are closed with an end closer and not fixed on the hanger.
- The movement span of Dilation Module is 50mm.

We recommend consulting our company during the project phase.

■ The dimensions given above are minimum values. ■ Please call us for non-standard components.

End Closer - S 10

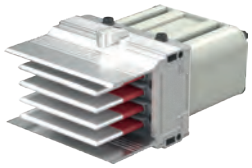

Sample Order:
CCRC 32804 - B - S10
3200 A, Copper, Bolt-on,
IP 68, 4 Conductor

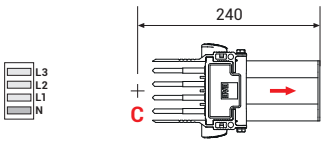

End Closer - S 11

Sample Order:
CCRC 32804 - B - S11
3200 A, Copper, Bolt-on,
IP 68, 4 Conductor

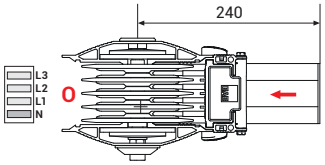

■ The dimensions given above are minimum values. ■ Please call us for non-standard components.

E-LINE CCR

▶▶Panel / Transformer Connections

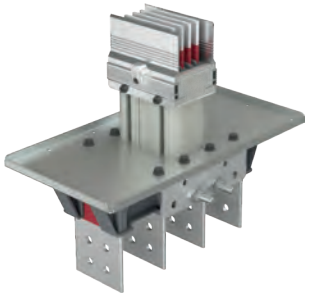

Panel / Transformer Connection **- P 10** **- TR 10**

Panel/Transformer Feeder

Sample Order:
CCRC 32804 - B - P10
3200 A, Copper, Bolt-on,
IP 68, 4 Conductor

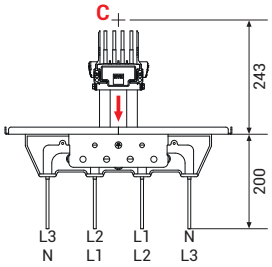

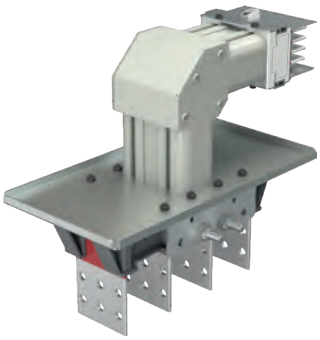

Upwards Panel / Transformer Connection **- PU 20** **- TU 20**

Panel/Transformer Feeder

Sample Order:
CCRC 32804 - B - PU20
3200 A, Copper, Bolt-on,
IP 68, 4 Conductor

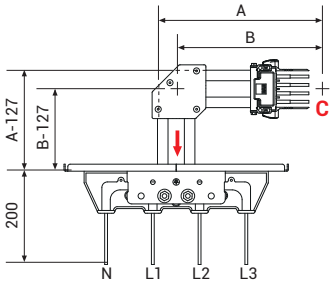

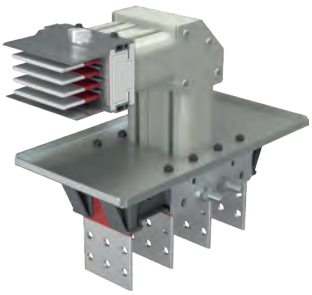

Downwards Panel / Transformer Connection **- PD 20** **- TD 20**

Panel/Transformer Feeder

Sample Order:
CCRC 32804 - B - PD20
3200 A, Copper, Bolt-on,
IP 68, 4 Conductor

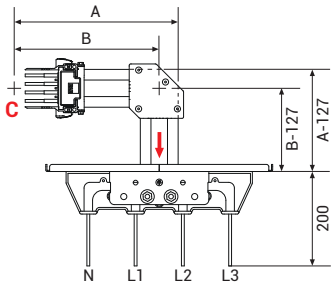

Conductor Dimension Table

Number of Conductors	3	4	4½	5
A (mm)	337	344	351	351
B (mm)	300	304	307	307

Right Panel / Transformer Connection **- PR 30** **- TR 30**

Panel/Transformer Feeder

Sample Order:
CCRC 32804 - B - PL30
3200 A, Copper, Bolt-on,
IP 68, 4 Conductor

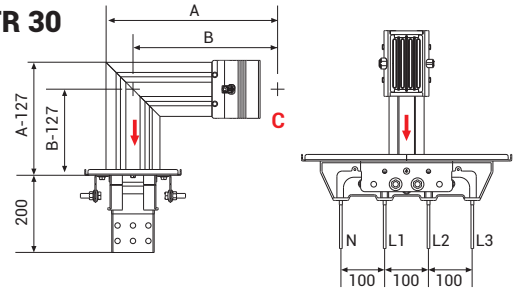

Table For Outer Dimension of Busbars

CCRA - Al Conductor	Rated Current	600	-	-	800	1000	1250	-	1600	2000	-	-	-	2500	-	3000	3300	3600	4000	4500	-	-	5000	5400
	Busbar Code	06	-	-	09	10	12	-	16	21	-	-	-	25	-	31	33	37	41	44	-	-	50	54
CCRC - Cu Conductor	Rated Current	650	850	1000	1250	-	1600	2000	-	-	2500	3200	3400	-	4000	-	4500	-	-	-	5000	5750	6300	-
	Busbar Code	06	08	10	12	-	16	20	-	-	25	32	34	-	40	-	45	-	-	-	50	57	63	-
A	(mm)	310	315	325	350	365	380	420	430	500	470	530	560	570	590	630	670	710	770	810	725	830	890	950
B	(mm)	275	278	283	295	303	310	330	335	370	355	385	400	405	415	435	455	475	505	525	483	535	565	595

■The dimensions given above are minimum values. ■Please call us for non-standard components. ■Do not hanger the relevant modules from the flanges.

E-LINE CCR

▶▶Panel / Transformer Connections

Panel / Transformer Connection **- P 11** **- T R11**

Panel/Transformer Output

Sample Order:
CCRC 32804 - B - TR11
3200 A, Copper, Bolt-on,
IP 68, 4 Conductor

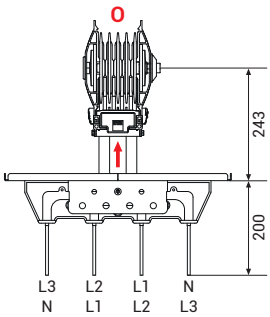

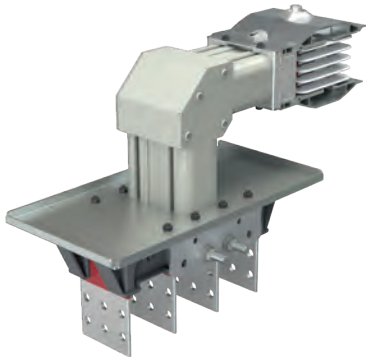

Upwards Panel / Transformer Connection **- PU 21** **- TU 21**

Panel/Transformer Output

Sample Order:
CCRC 32804 - B - TU21
3200 A, Copper, Bolt-on,
IP 68, 4 Conductor

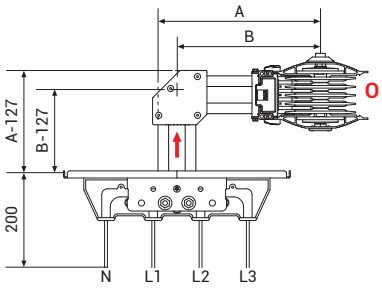

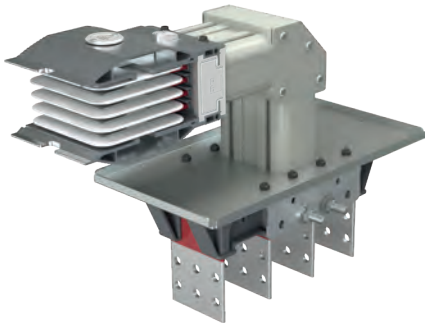

Downwards Panel / Transformer Connection **- PD 21** **- TD 21**

Panel/Transformer Output

Sample Order:
CCRC 32804 - B - TD21
3200 A, Copper, Bolt-on,
IP 68, 4 Conductor

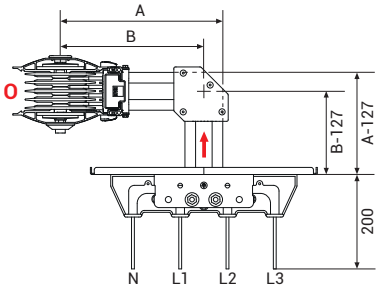

Conductor Dimension Table

Number of Conductors	3	4	4½	5
A (mm)	337	344	351	351
B (mm)	300	304	307	307

Right Panel / Transformer Connection **- PR 31** **- TR 31**

Panel/Transformer Output

Sample Order:
CCRC 32804 - B - TR31
3200 A, Copper, Bolt-on,
IP 68, 4 Conductor

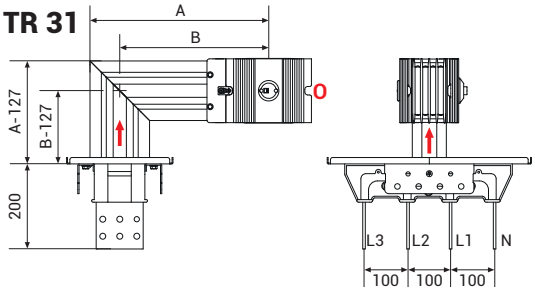

Table For Outer Dimension of Busbars

CCRA - Al Conductor	Rated Current	600	-	-	800	1000	1250	-	1600	2000	-	-	-	2500	-	3000	3300	3600	4000	4500	-	-	5000	5400
	Busbar Code	06	-	-	09	10	12	-	16	21	-	-	-	25	-	31	33	37	41	44	-	-	50	54
CCRC - Cu Conductor	Rated Current	650	850	1000	1250	-	1600	2000	-	-	2500	3200	3400	-	4000	-	4500	-	-	-	5000	5750	6300	-
	Busbar Code	06	08	10	12	-	16	20	-	-	25	32	34	-	40	-	45	-	-	-	50	57	63	-
A	(mm)	310	315	325	350	365	380	420	430	500	470	530	560	570	590	630	670	710	770	810	725	830	890	950
B	(mm)	275	278	283	295	303	310	330	335	370	355	385	400	405	415	435	455	475	505	525	483	535	565	595

■ The dimensions given above are minimum values. ■ Please call us for non-standard components. ■ Do not hanger the relevant modules from the flanges.

E-LINE CCR

▶▶Panel / Transformer Connections

Left Panel / Transformer Connection

- PL 30
- TL 30

Panel/Transformer Feeder

Sample Order:
CCRC 32804 - B - PL30
3200 A, Copper, Bolt-on,
IP 68, 4 Conductor

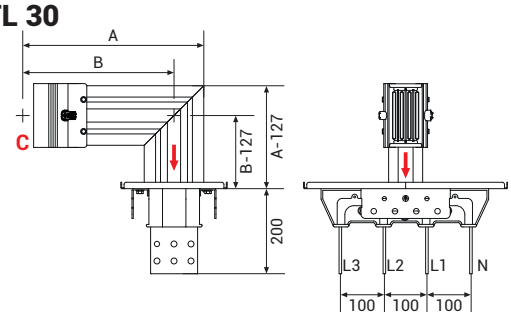

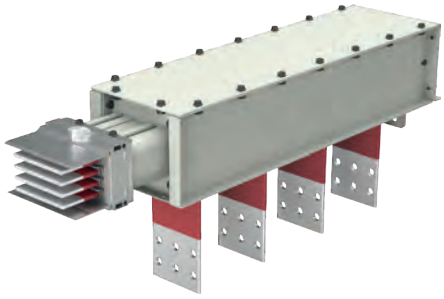

Horizontal Panel / Transformer Connection

- P 40
- TR 40

Panel/Transformer Feeder

Sample Order:
CCRC 32804 - B - P40
3200 A, Copper, Bolt-on,
IP 68, 4 Conductor

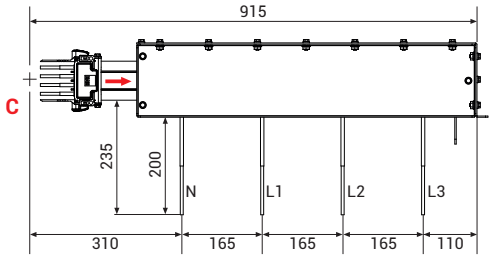

Table For Outer Dimension of Busbars

CCRA - Al Conductor	Rated Current	600	-	-	800	1000	1250	-	1600	2000	-	-	-	2500	-	3000	3300	3600	4000	4500	-	-	5000	5400
	Busbar Code	06	-	-	09	10	12	-	16	21	-	-	-	25	-	31	33	37	41	44	-	-	50	54
CCRC - Cu Conductor	Rated Current	650	850	1000	1250	-	1600	2000	-	-	2500	3200	3400	-	4000	-	4500	-	-	-	5000	5750	6300	-
	Busbar Code	06	08	10	12	-	16	20	-	-	25	32	34	-	40	-	45	-	-	-	50	57	63	-
A	(mm)	310	315	325	350	365	380	420	430	500	470	530	560	570	590	630	670	710	770	810	725	830	890	950
B	(mm)	275	278	283	295	303	310	330	335	370	355	385	400	405	415	435	455	475	505	525	483	535	565	595

■The dimensions given above are minimum values. ■Please call us for non-standard components. ■Do not hanger the relevant modules from the flanges.

E-LINE CCR

▶▶Panel / Transformer Connections

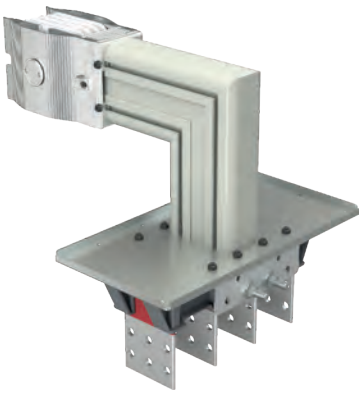

Left Panel / Transformer Connection **- PL 31**
- TL 31

Pano/Transformer Output

Sample Order:
CCRC 32804 - B - TL31
3200 A, Copper, Bolt-on,
IP 68, 4 Conductor

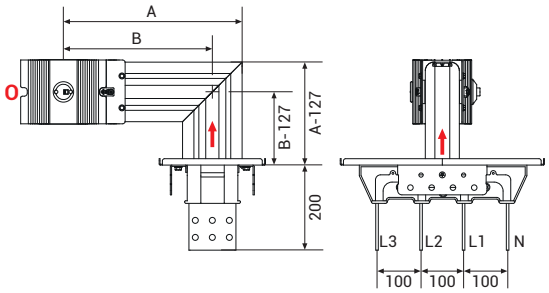

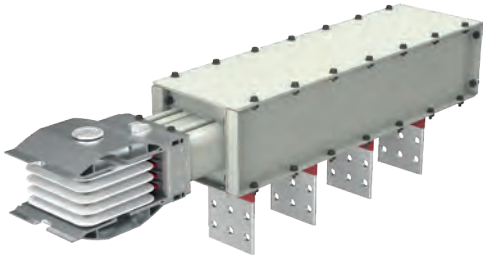

Horizontal Panel / Transformer Connection **- P 41**
- TR 41

Pano/Transformer Output

Sample Order:
CCRC 32804 - B - TR41
3200 A, Copper, Bolt-on,
IP 68, 4 Conductor

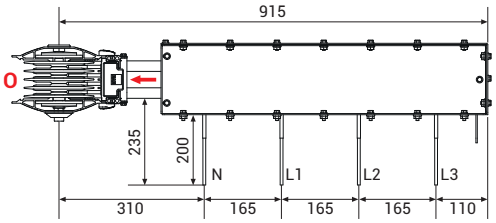

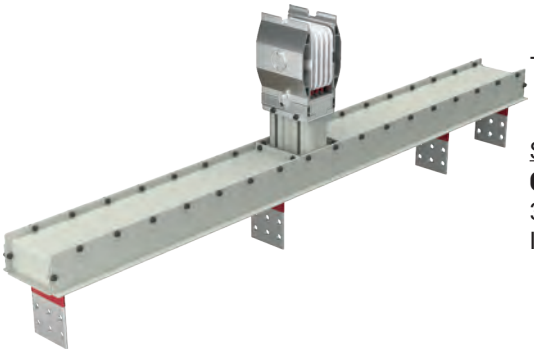

Transformer Connection **- TR 61**

Transformer Output

Sample Order:
CCRC 32804 - B - TR61
3200 A, Copper, Bolt-on,
IP 68, 4 Conductor

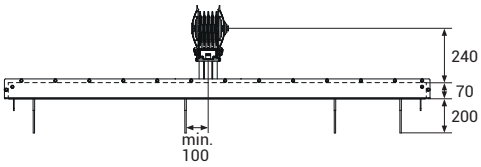

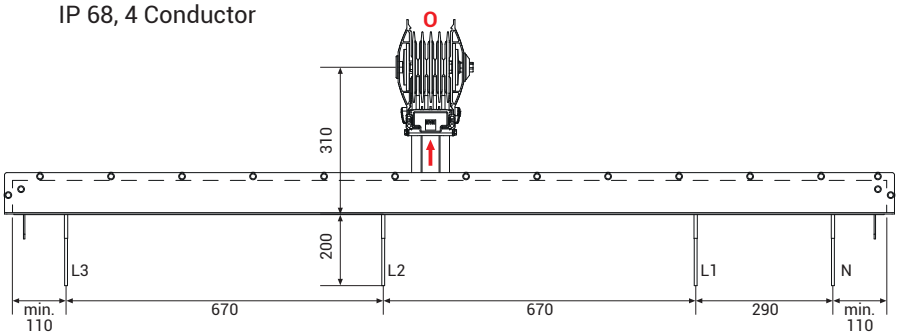

Table For Outer Dimension of Busbars

CCRA - Al Conductor	Rated Current	600	-	-	800	1000	1250	-	1600	2000	-	-	-	2500	-	3000	3300	3600	4000	4500	-	-	5000	5400
	Busbar Code	06	-	-	09	10	12	-	16	21	-	-	-	25	-	31	33	37	41	44	-	-	50	54
CCRC - Cu Conductor	Rated Current	650	850	1000	1250	-	1600	2000	-	-	2500	3200	3400	-	4000	-	4500	-	-	-	5000	5750	6300	-
	Busbar Code	06	08	10	12	-	16	20	-	-	25	32	34	-	40	-	45	-	-	-	50	57	63	-
A	(mm)	310	315	325	350	365	380	420	430	500	470	530	560	570	590	630	670	710	770	810	725	830	890	950
B	(mm)	275	278	283	295	303	310	330	335	370	355	385	400	405	415	435	455	475	505	525	483	535	565	595

■ The dimensions given above are minimum values. ■ Please call us for non-standard components. ■ Do not hanger the relevant modules from the flanges.

E-LINE CCR

▶▶Panel / Transformer Connections

Panel Connection Units

Panel Connection Units (P10, TR11, PU20, TU21, PD20, TD21, PR30, TR31, PL30, TL31, P40, TR41, TR61)

CCRA 06
CCRC 06

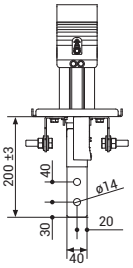

CCRC 08

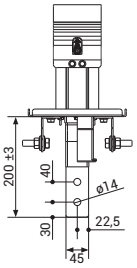

CCRC 10

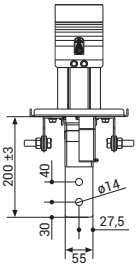

CCRA 09
CCRC 12

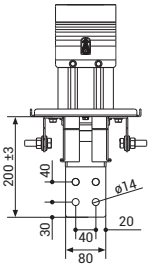

CCRA 10

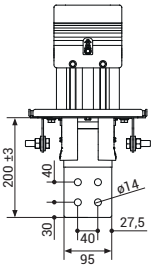

CCRA 12
CCRC 16

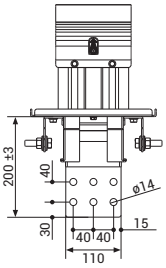

CCRC 20

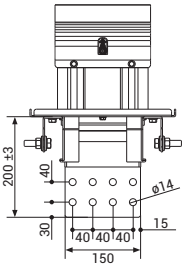

CCRA 16

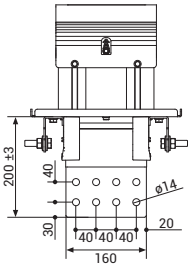

CCRA 21

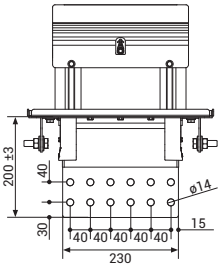

CCRC 25

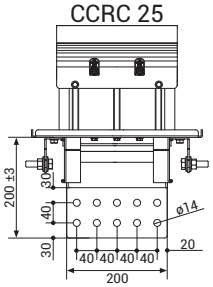

CCRC 32

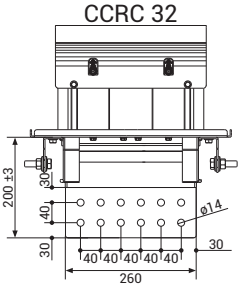

CCRC 34

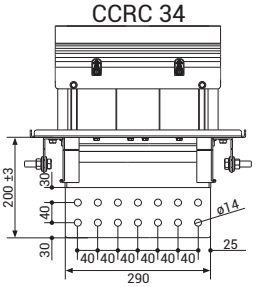

CCRA 25

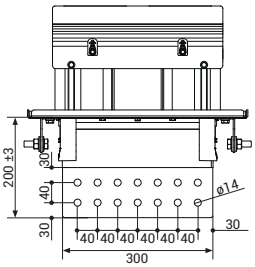

CCRC 40

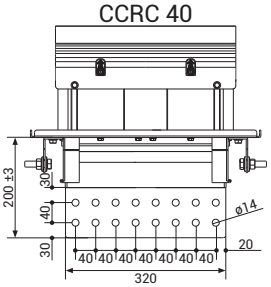

CCRA 31

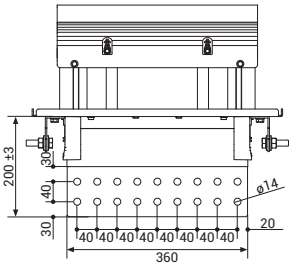

CCRA 33
CCRC 45

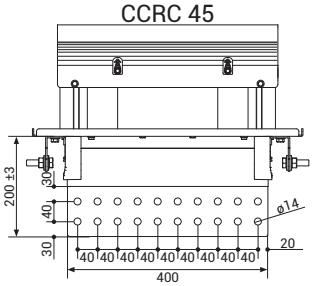

CCRA 37

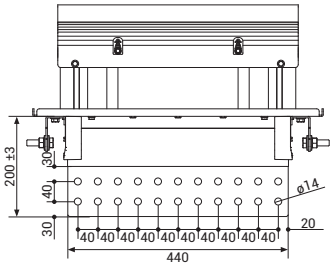

CCRA 41

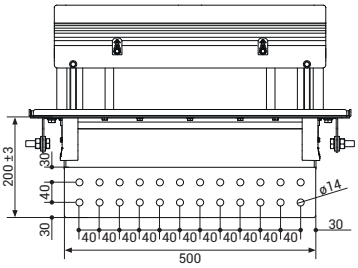

CCRA 44

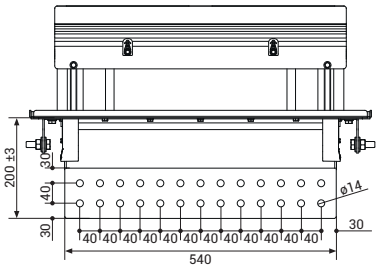

CCRC 50

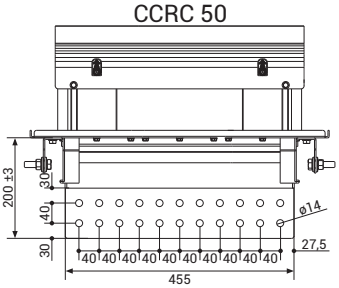

CCRC 57

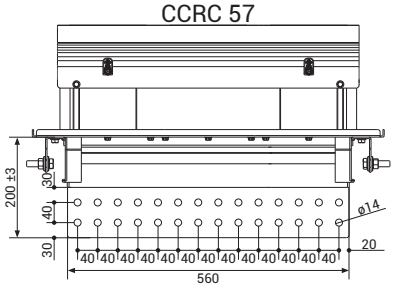

CCRA 50
CCRC 63

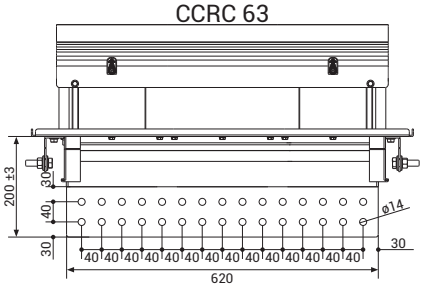

CCRA 54

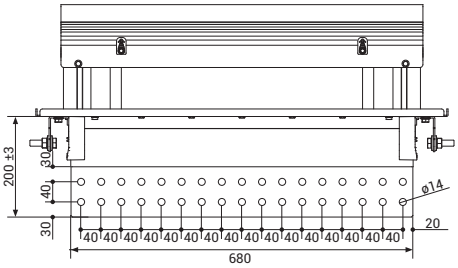

Sample Connection

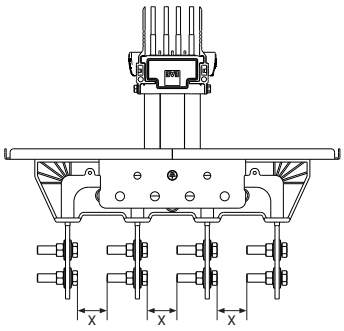

(Minimum X=25mm)

- The dimensions given above are minimum values.
- Please call us for non-standard components.
- Do not hanger the relevant modules from the flanges.
- Distance between conductors can vary in ±5 mm.

E-LINE CCR

▶▶Panel / Transformer Connections

Panel Connection Units

Panel Connection Units (P40, TR41, TR61)

CCRA 06
CCRC 06

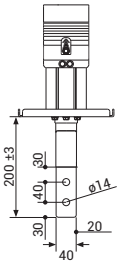

CCRC 08

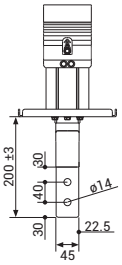

CCRC 10

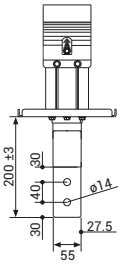

CCRA 09
CCRC 12

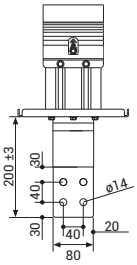

CCRA 10

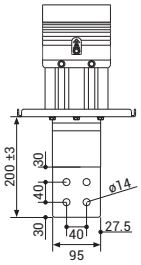

CCRA 12
CCRC 16

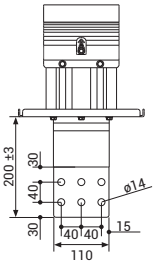

CCRC 20

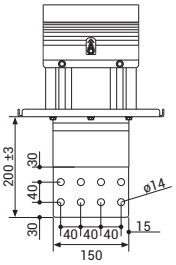

CCRA 16

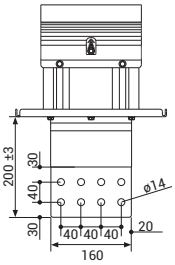

CCRA 21

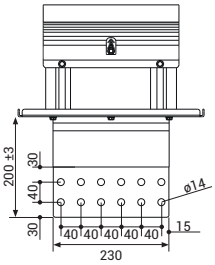

CCRC 25

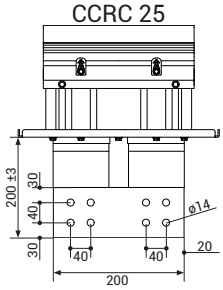

CCRC 32

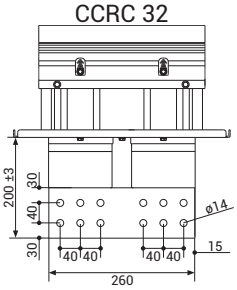

CCRC 34

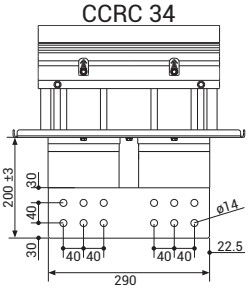

CCRA 25

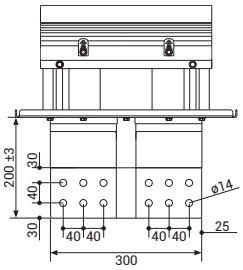

CCRC 40

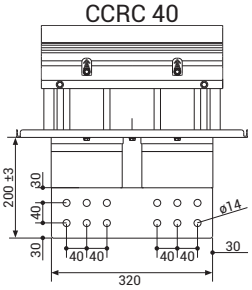

CCRC 31

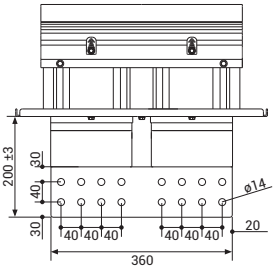

CCRA 33
CCRC 45

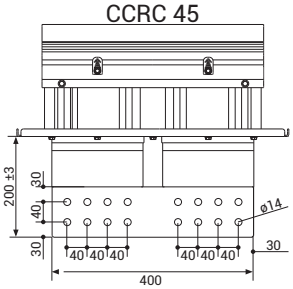

CCRA 37

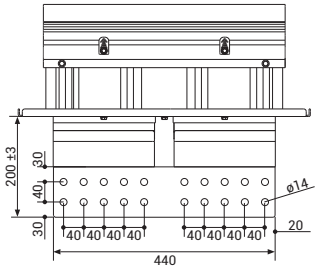

CCRA 41

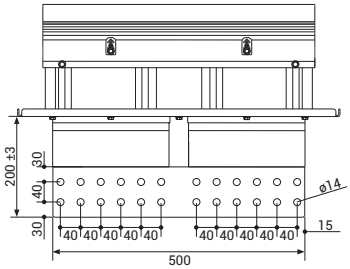

CCRA 44

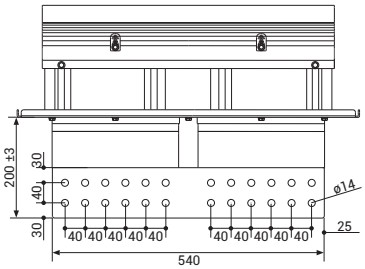

CCRC 50

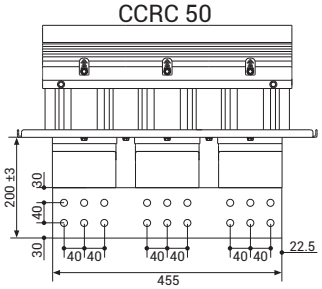

CCRC 57

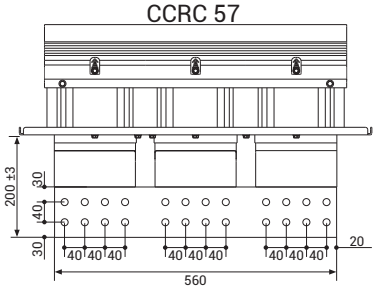

CCRC 63

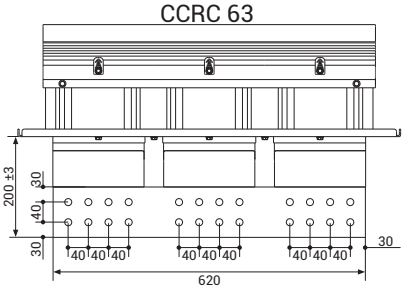

CCRA 54

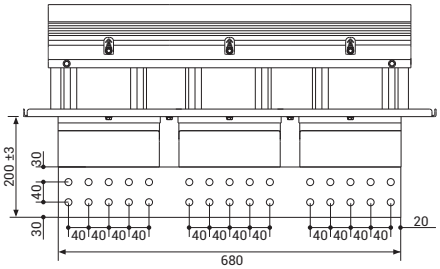

- The dimensions given above are minimum values.
- Please call us for non-standard components.
- Do not hanger the relevant modules from the flanges.
- Distance between conductors can vary in ±5 mm.

E-LINE CCR

▶▶Panel / Transformer Connections

Panel Modules Flange Dimensions

Panel Connection Units are supplied with suitable flange as standard.

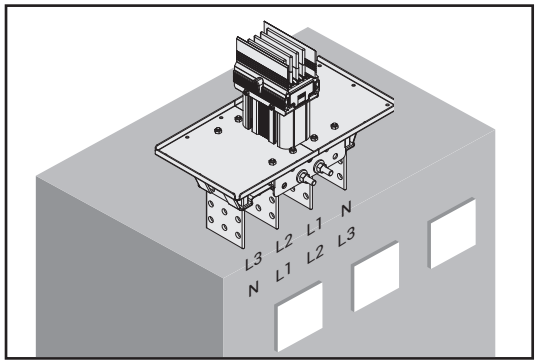

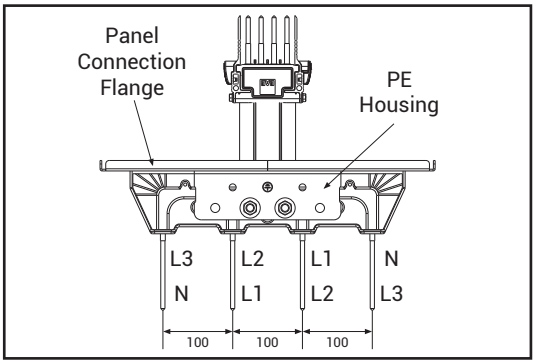

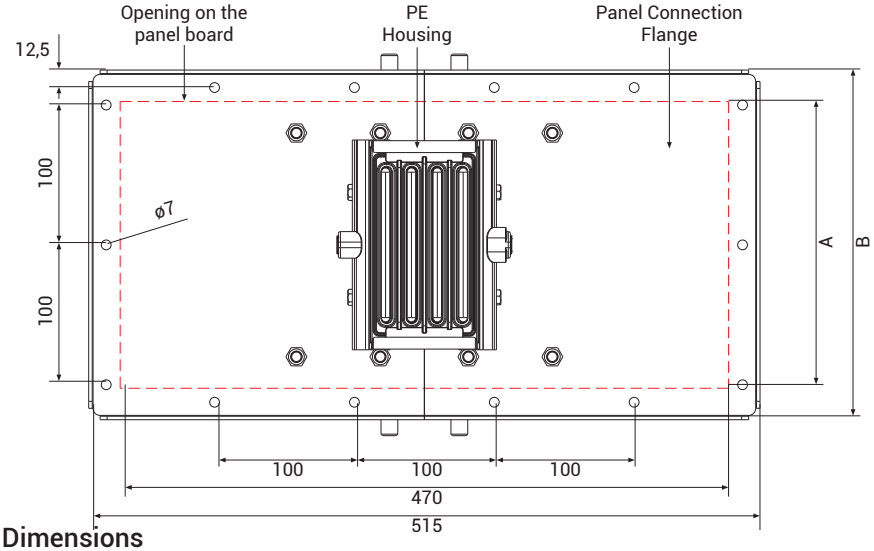

Panel Modules Flange Dimensions

* Bolt and nut sets are supplied together with related product as per the quantities below.

Aluminium (Al)		Copper (Cu)						
Rated Current	Busbar Code	Rated Current	Busbar Code	Conductor	A (mm)	B (mm)	Number of the holes along "B" length	* M6 Bolt/Nut Set (Pcs.)
600	06	650	06	6x40	135	180	2	12
-	-	850	08	6x45	140	185	2	12
-	-	1000	10	6x55	150	195	2	12
800	09	1250	12	6x80	175	220	2	12
1000	10	-	-	6x95	190	235	3	14
1250	12	1600	16	6x110	205	250	3	14
-	-	2000	20	6x150	245	290	3	14
1600	16	-	-	6x160	255	300	3	14
2000	21	-	-	6x230	325	370	4	16
-	-	2500	25	2(6x80)	295	340	4	16
-	-	3200	32	2(6x110)	355	400	4	16
-	-	3400	34	2(6x125)	385	430	5	18
2500	25	-	-	2(6x130)	395	440	5	18
-	-	4000	40	2(6x140)	415	460	5	18
3000	31	-	-	2(6x160)	455	500	5	18
3300	33	4500	45	2(6x180)	495	540	6	20
3600	37	-	-	2(6x200)	535	580	6	20
4000	41	-	-	2(6x230)	595	640	7	22
4500	44	-	-	2(6x250)	635	680	7	22
-	-	5000	50	3(6x125)	550	595	6	20
-	-	5750	57	3(6x160)	655	700	7	22
5000	50	6300	63	3(6x180)	715	760	8	24
5400	54	-	-	3(6x200)	775	820	8	24

■ Do not hanger the relevant modules from the flanges.

E-LINE CCR

▶▶Edgewise and Flatwise CCR Applications

Figure 1 - Edgewise Application

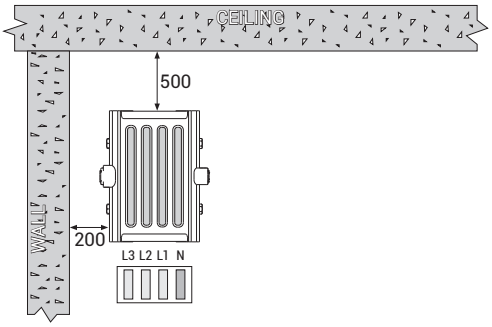

Figure 2 - Edgewise Application

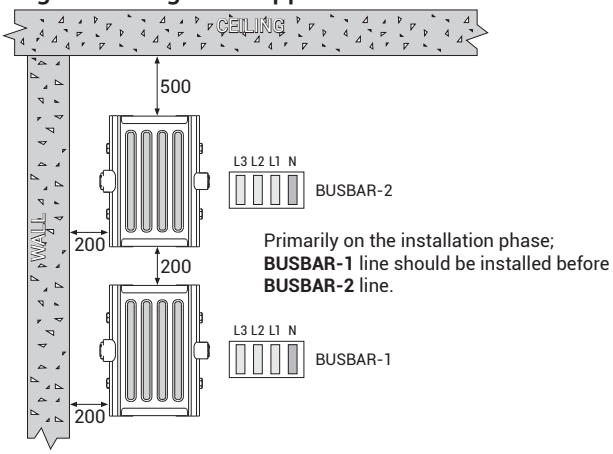

Figure 3 - Flatwise Application

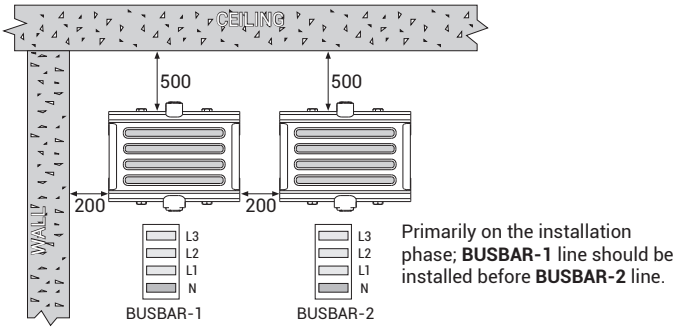

Figure 4 - Crossing Under A Beam On Edgewise Application

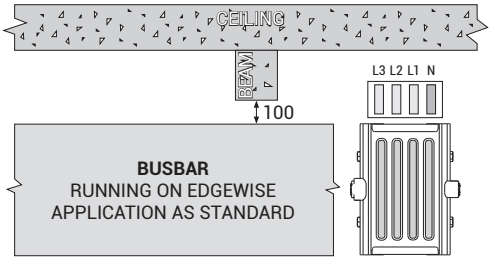

Figure 5 - Crossing Under A Beam On Flatwise Application

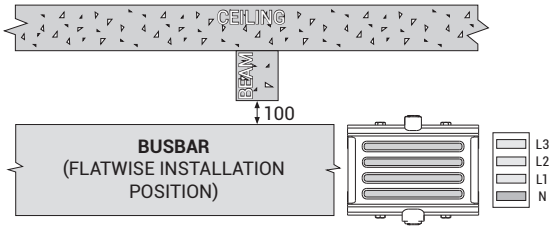

Figure 6 - Sample Wall Crossing With Fire Barrier

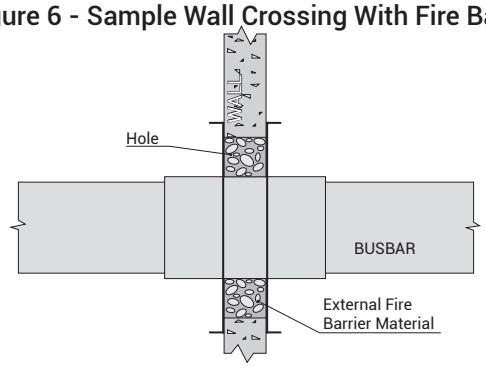

Figure 7 - Standard Wall Crossing

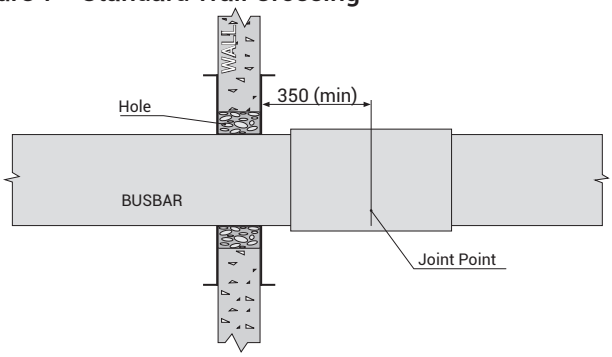

Figure 8 - Edgewise application in gallery

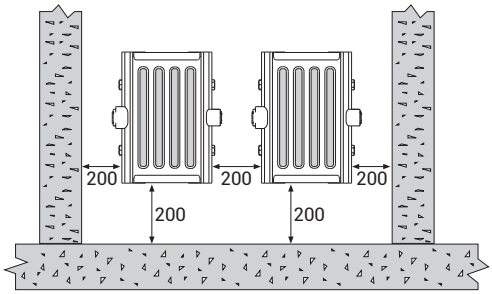

Figure 9 - Flatwise application in gallery

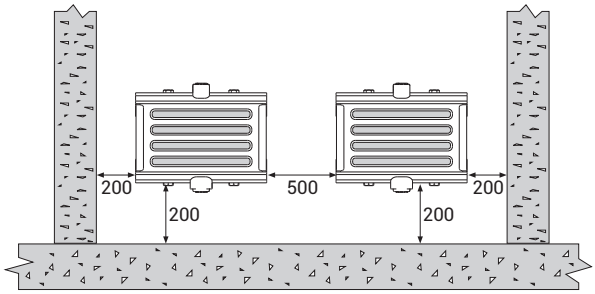

Attention!

- For correct installation, the dimension from the busbar to the ceiling should not be less than 500mm.
- He joint should be not come across to Beams.
- The dimensions given above are minimum values.
- All dimensions are given in mm.

E-LINE CCR

▶▶Fixing Elements

Vertical Shaft Type Carriers

CCR Vertical Riser Fixing Unit

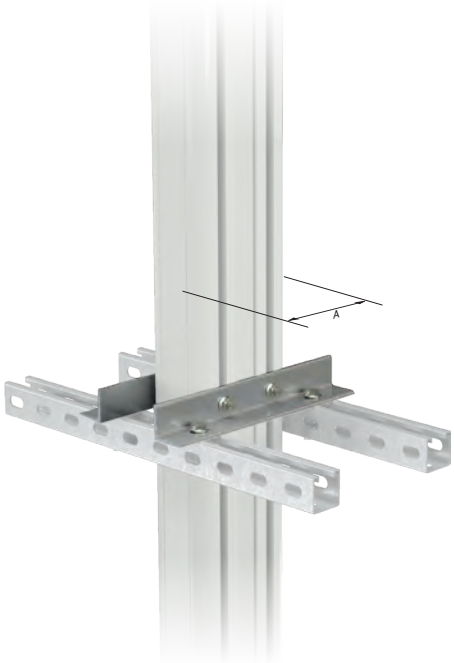

CCRA - Al Conductor		CCRC - Cu Conductor		Conductor	A (mm)	L (mm)	Order Code
Rated Current	Busbar Code	Rated Current	Busbar Code				
800	09	1250	12	6x80	110	250	3257224
1000	10	-	-	6x95	125	265	3325698
1250	12	1600	16	6x110	140	280	3257225
-	-	2000	20	6x150	180	320	3257226
1600	16	-	-	6x160	190	330	3290768
2000	21	-	-	6x230	260	400	3325699
-	-	2500	25	2(6x80)	230	370	3257228
-	-	3200	32	2(6x110)	290	430	3257229
-	-	3400	34	2(6x125)	320	460	3257230
2500	25	-	-	2(6x130)	330	470	3325700
-	-	4000	40	2(6x140)	350	490	3257231
3000	31	-	-	2(6x160)	390	530	3290770
3300	33	4500	45	2(6x180)	430	570	3290771
3600	37	-	-	2(6x200)	470	610	3290772
4000	41	-	-	2(6x230)	530	670	3325702
4500	44	-	-	2(6x250)	570	710	3325703
-	-	5000	50	3(6x125)	485	625	3257232
-	-	5750	57	3(6x160)	590	730	3257233
5000	50	6300	63	3(6x180)	650	790	3257234
5400	54	-	-	3(6x200)	710	850	3290774

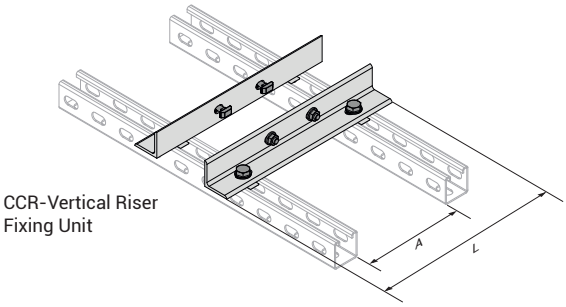

CCR-Vertical Riser Fixing Unit

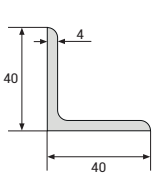

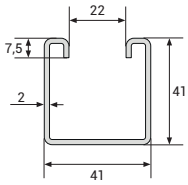

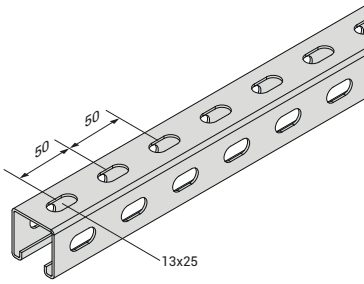

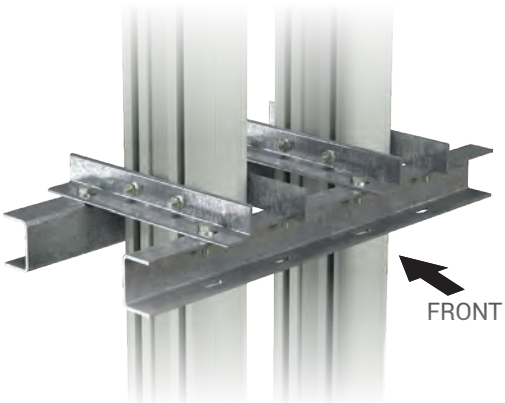

Vertical Riser Application Sample Order Hanging
(Special to project)

■ The dimensions given above are minimum values. ■ Please call us for non-standard components. ■ All measures are given in mm. ■ The span between supports should be 1.5m

E-LINE CCR

▶▶Fixing Elements

Ceiling Type Supports

CCR-UT Two-Way For Edgewise Application To NPI Channel

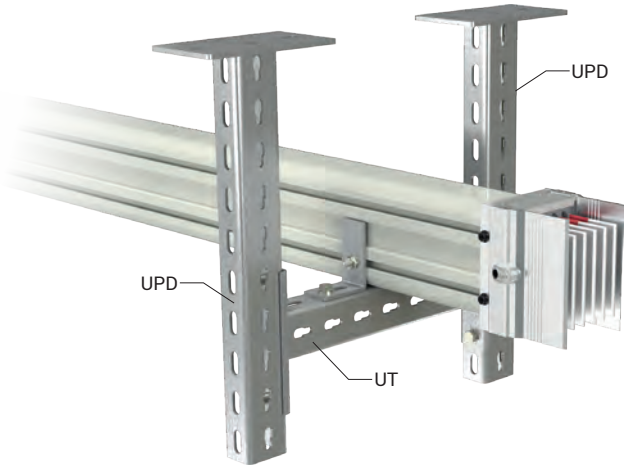

Floor Type Supports

CCR-UT Two-Way For Edgewise Application To NPI Channel

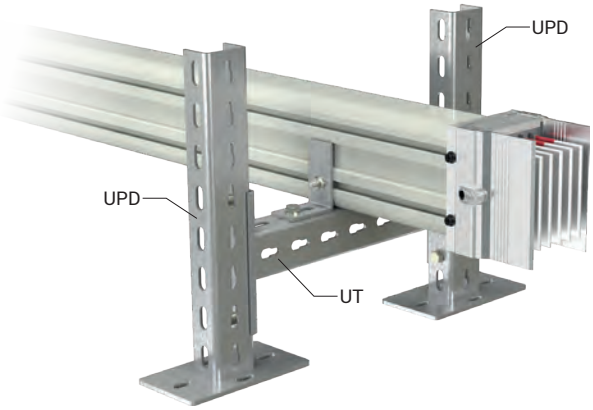

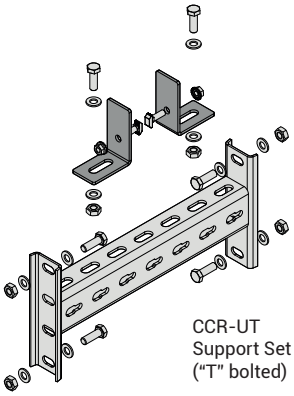

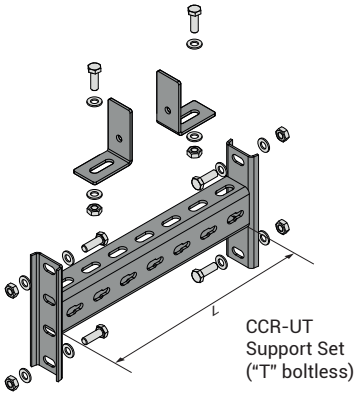

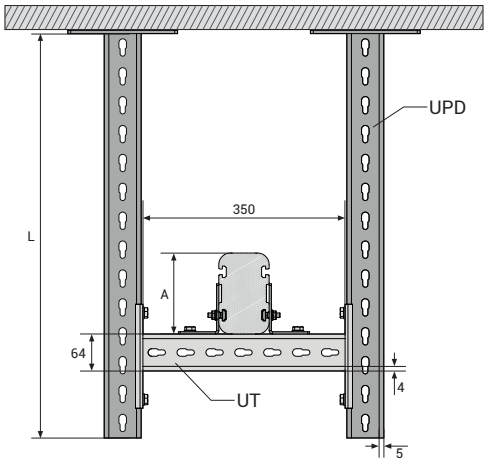

When selecting an **UPD** product, please keep in mind to select the **UPD** product suitable to the Busbar **A** dimension.

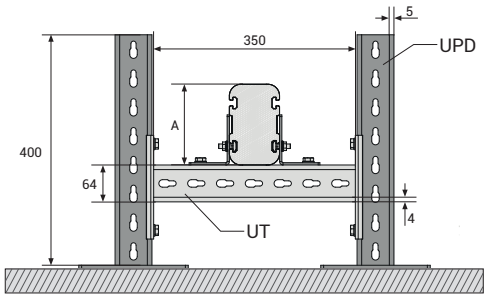

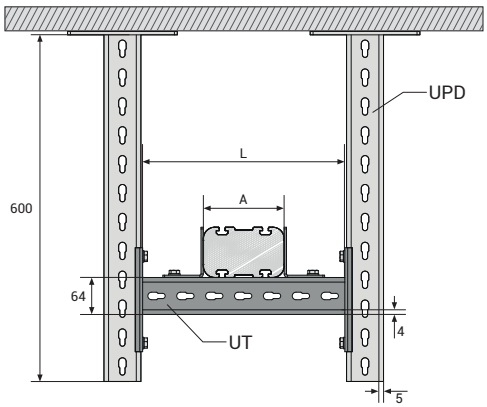

When choosing **CCR-UT Suspension Set**, appropriate **CCR-UT Suspension Set** should be selected according to Busbar size.

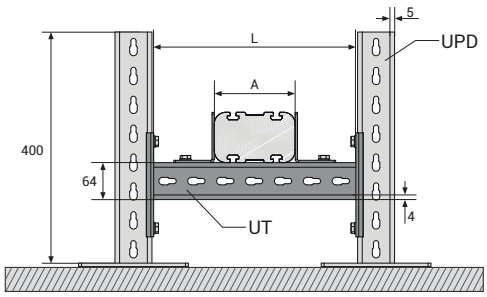

■ The dimensions given above are minimum values. ■ Please call us for non-standard components. ■ All measures are given in mm. ■ The span between supports should be 1.5m

E-LINE CCR

▶▶Fixing Elements

Heavy Duty Supports (U)

Hot Dip Galvanized After Fabrication (TS EN ISO 1461)

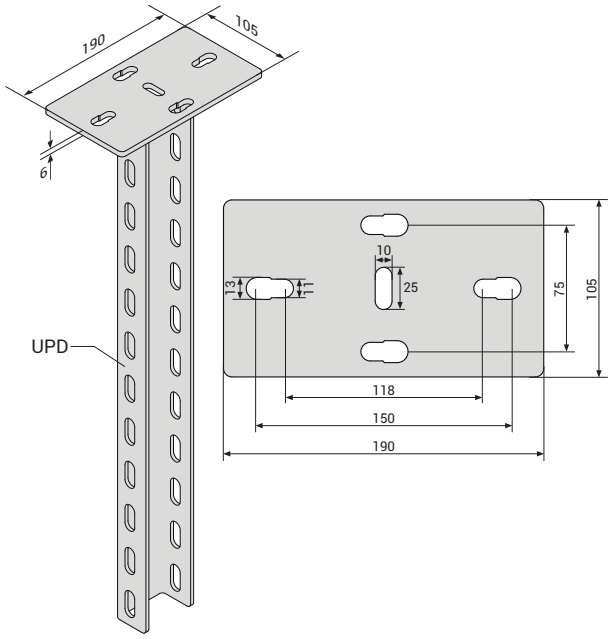

When selecting an **UPD** product, please keep in mind to select the **UPD** product suitable to the Busbar **A** dimension.

CCRA - Al Conductor		CCRC - Cu Conductor		Conductor	A (mm)	UPD L (mm)	Order Code
Rated Current	Busbar Code	Rated Current	Busbar Code				
Zemin Tipi UPD Askı Takımı						400	3004512
600	06	650	06	6x40	70	700	3004518
-	-	850	08	6x45	75	700	3004518
-	-	1000	10	6x55	85	700	3004518
800	09	1250	12	6x80	110	700	3004518
1000	10	-	-	6x95	125	700	3004518
1250	12	1600	16	6x110	140	800	3004519
-	-	2000	20	6x150	180	800	3004519
1600	16	-	-	6x160	190	800	3004519
2000	21	-	-	6x230	260	800	3004519
-	-	2500	25	2(6x80)	230	800	3004519
-	-	3200	32	2(6x110)	290	800	3004519
-	-	3400	34	2(6x125)	320	900	3004520
2500	25	-	-	2(6x130)	330	900	3004520
-	-	4000	40	2(6x140)	350	1000	3004521
3000	31	-	-	2(6x160)	390	1000	3004521
3300	33	4500	45	2(6x180)	430	1100	3004522
3600	37	-	-	2(6x200)	470	1100	3004522
4000	41	-	-	2(6x230)	530	1100	3004522
4500	44	-	-	2(6x250)	570	1100	3004522
-	-	5000	50	3(6x125)	485	1100	3004522
-	-	5750	57	3(6x160)	590	1200	3004523
5000	50	6300	63	3(6x180)	650	1200	3004523
5400	54	-	-	3(6x200)	710	1300	3004524

CCR-UT Suspension Assembly

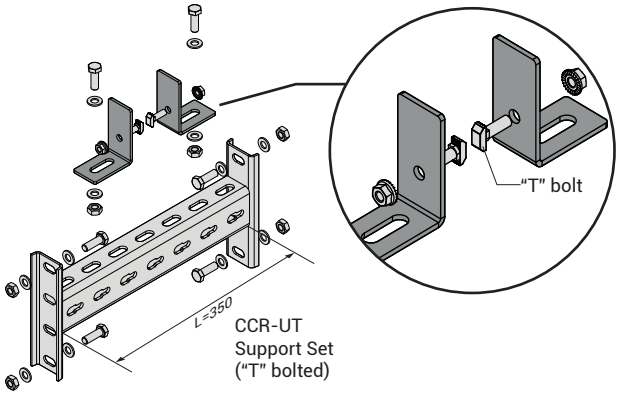

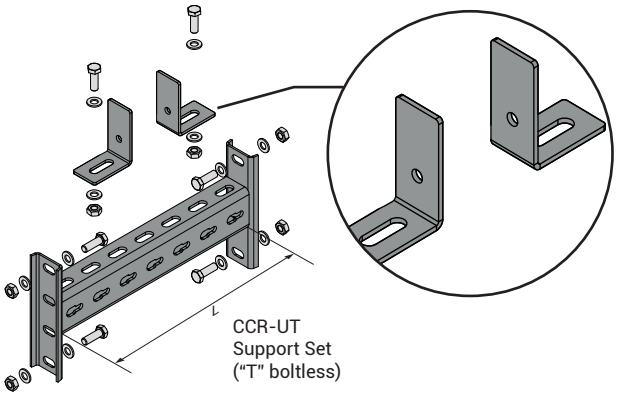

When choosing **CCR-UT Suspension Set**, appropriate **CCR-UT Suspension Set** should be selected according to Busbar size.

CCRA - Al Conductor		CCRC - Cu Conductor		Conductor	A (mm)	UT L (mm)	Order Code
Rated Current	Busbar Code	Rated Current	Busbar Code				
CCR-UT Askı Takımı ("T" cıvatalı)						350	3257217
600	06	650	06	6x40	70	350	3108705
-	-	850	08	6x45	75	350	3108705
-	-	1000	10	6x55	85	350	3108705
800	09	1250	12	6x80	110	350	3108705
1000	10	-	-	6x95	125	350	3108705
1250	12	1600	16	6x110	140	350	3108705
-	-	2000	20	6x150	180	450	3108707
1600	16	-	-	6x160	190	450	3108707
2000	21	-	-	6x230	260	450	3108707
-	-	2500	25	2(6x80)	230	450	3108707
-	-	3200	32	2(6x110)	290	550	3108708
-	-	3400	34	2(6x125)	320	550	3108708
2500	25	-	-	2(6x130)	330	550	3108708
-	-	4000	40	2(6x140)	350	650	3108709
3000	31	-	-	2(6x160)	390	750	3108710
3300	33	4500	45	2(6x180)	430	750	3108710
3600	37	-	-	2(6x200)	470	750	3108710
4000	41	-	-	2(6x230)	530	750	3108710
4500	44	-	-	2(6x250)	570	750	3108710
-	-	5000	50	3(6x125)	485	750	3108710
-	-	5750	57	3(6x160)	590	850	3108711
5000	50	6300	63	3(6x180)	650	950	3108712
5400	54	-	-	3(6x200)	710	1050	3290778

■ Please check our Suspension Systems (A-A) Catalogue to see our alternative solutions for suspension types.

■ The dimensions given above are minimum values. ■ Please call us for non-standard components. ■ All measures are given in mm. ■ The span between supports should be 1.5m

E-LINE CCR

▶▶Fixing Elements

Ceiling Type Supports

CCR-IDY Two-Way For Edgewise Application To NPI Channel

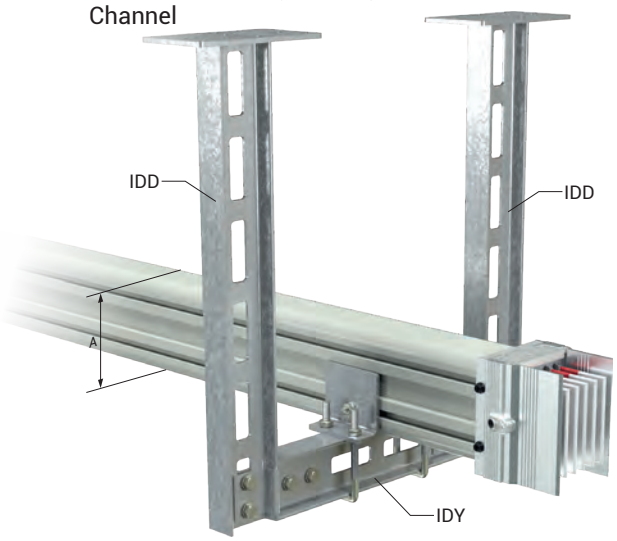

Floor Type Supports

CCR-IDY Two-Way For Edgewise Application To NPI Channel

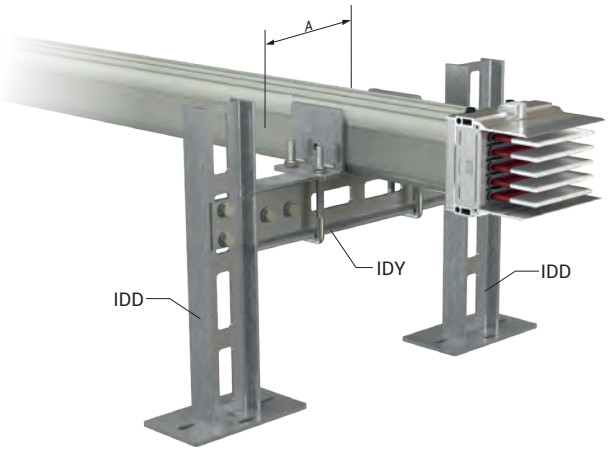

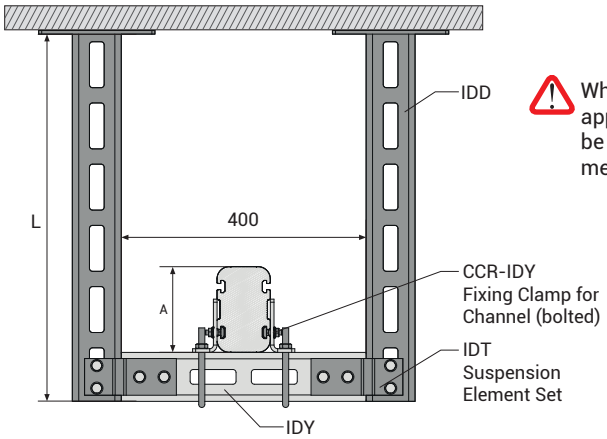

When selecting **IDD** products, the appropriate **IDD** product should be selected based on Busbar **A** measurement.

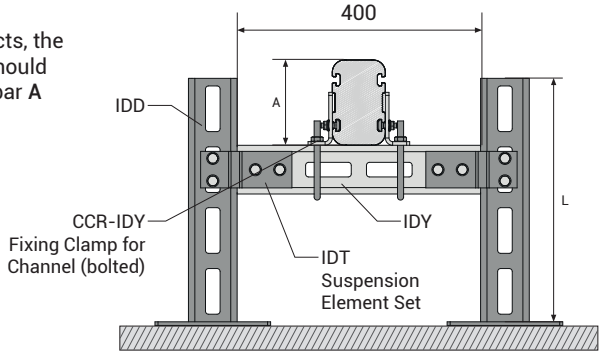

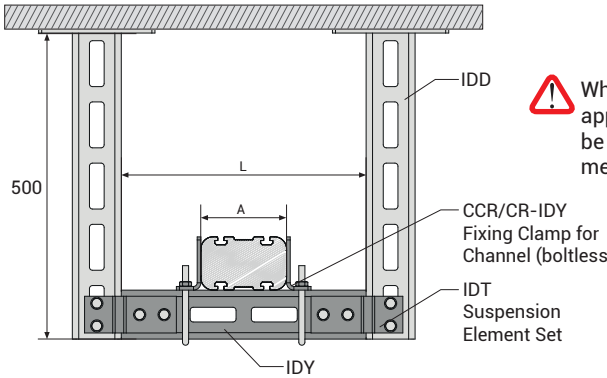

When selecting **IDY** products, the appropriate **IDY** product should be selected based on Busbar **A** measurement.

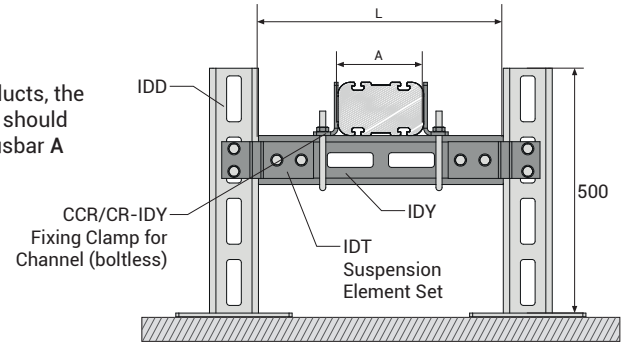

Supports

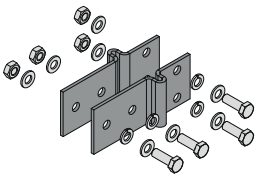

IDT
Suspension Element Set

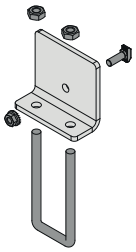

CCR-IDY
Fixing Clamp for
Channel (bolted)

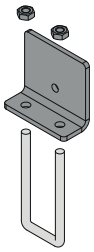

CCR/CR-IDY
Fixing Clamp for
Channel (boltless)

Description	Order Code
CCR-IDT Suspension Element Set	3008279
CCR-IDY Fixing Clamp for Channel (bolted)	3265712
CCR/CR-IDY Fixing Clamp for Channel (boltless)	3265713

■ Please check our Suspension Systems (A-A) Catalogue to see our alternative solutions for suspension types.

■ The dimensions given above are minimum values. ■ Please call us for non-standard components. ■ All measures are given in mm. ■ The span between supports should be 1.5m

E-LINE CCR

▶▶Fixing Elements

IDD Type Supports

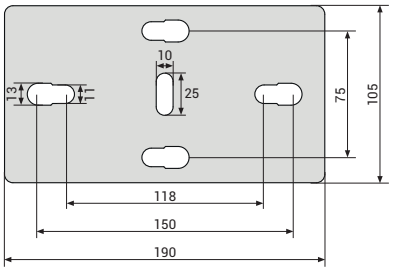

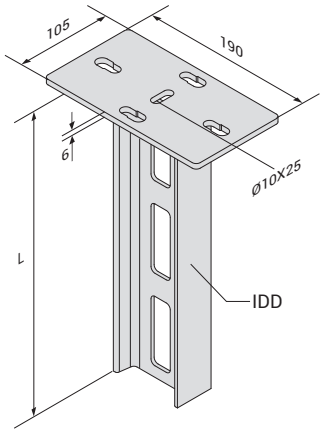

When selecting **IDD** products, the appropriate **IDD** product should be selected based on Busbar **A** measurement.

CCRA - Al Conductor		CCRC - Cu Conductor		Conductor	A (mm)	Description	IDD L (mm)	Order Code
Rated Current	Busbar Code	Rated Current	Busbar Code					
600	06	650	06	6x40	70	IDD 500	500	3008312
-	-	850	08	6x45	75	IDD 500	500	3008312
-	-	1000	10	6x55	85	IDD 500	500	3008312
800	09	1250	12	6x80	110	IDD 500	500	3008312
1000	10	-	-	6x95	125	IDD 500	500	3008312
1250	12	1600	16	6x110	140	IDD 600	600	3008311
-	-	2000	20	6x150	180	IDD 700	700	3008310
1600	16	-	-	6x160	190	IDD 700	700	3008310
2000	21	-	-	6x230	260	IDD 700	700	3008310
-	-	2500	25	2(6x80)	230	IDD 700	700	3108707
-	-	3200	32	2(6x110)	290	IDD 800	800	3008309
-	-	3400	34	2(6x125)	320	IDD 800	800	3008309
2500	25	-	-	2(6x130)	330	IDD 800	800	3008309
-	-	4000	40	2(6x140)	350	IDD 800	800	3008309
3000	31	-	-	2(6x160)	390	IDD 900	900	3008308
3300	33	4500	45	2(6x180)	430	IDD 1000	1000	3008307
3600	37	-	-	2(6x200)	470	IDD 1000	1000	3008307
4000	41	-	-	2(6x230)	530	IDD 1100	1100	3008306
4500	44	-	-	2(6x250)	570	IDD 1100	1100	3008306
-	-	5000	50	3(6x125)	485	IDD 1000	1000	3008307
-	-	5750	57	3(6x160)	590	IDD 1100	1100	3008306
5000	50	6300	63	3(6x180)	650	IDD 1100	1100	3008306
5400	54	-	-	3(6x200)	710	IDD 1200	1200	3008305

IDY Type Supports

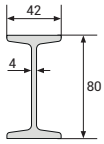

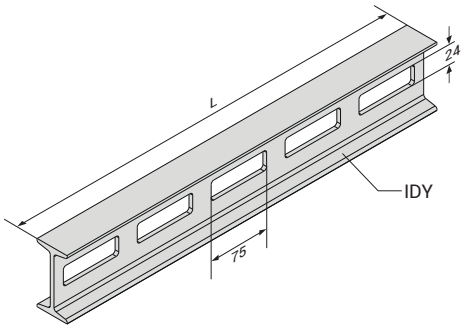

When selecting **IDY** products, the appropriate **IDY** product should be selected based on Busbar **A** measurement.

CCRA - Al Conductor		CCRC - Cu Conductor		Conductor	A (mm)	Description	IDY L (mm)	Order Code
Rated Current	Busbar Code	Rated Current	Busbar Code					
600	06	650	06	6x40	70	IDY 400	400	3008290
-	-	850	08	6x45	75	IDY 400	400	3008290
-	-	1000	10	6x55	85	IDY 400	400	3008290
800	09	1250	12	6x80	110	IDY 400	400	3008290
1000	10	-	-	6x95	125	IDY 400	400	3008290
1250	12	1600	16	6x110	140	IDY 400	400	3008290
-	-	2000	20	6x150	180	IDY 500	500	3008289
1600	16	-	-	6x160	190	IDY 500	500	3008289
2000	21	-	-	6x230	260	IDY 500	500	3008289
-	-	2500	25	2(6x80)	230	IDY 500	500	3008289
-	-	3200	32	2(6x110)	290	IDY 500	500	3008289
-	-	3400	34	2(6x125)	320	IDY 600	600	3008288
2500	25	-	-	2(6x130)	330	IDY 600	600	3008288
-	-	4000	40	2(6x140)	350	IDY 600	600	3008288
3000	31	-	-	2(6x160)	390	IDY 700	700	3008287
3300	33	4500	45	2(6x180)	430	IDY 700	700	3008287
3600	37	-	-	2(6x200)	470	IDY 700	700	3008287
4000	41	-	-	2(6x230)	530	IDY 800	800	3008286
4500	44	-	-	2(6x250)	570	IDY 800	800	3008286
-	-	5000	50	3(6x125)	485	IDY 700	700	3008287
-	-	5750	57	3(6x160)	590	IDY 800	800	3008286
5000	50	6300	63	3(6x180)	650	IDY 900	900	3008285
5400	54	-	-	3(6x200)	710	IDY 1000	1000	3008284

■ Please check our Suspension Systems (A-A) Catalogue to see our alternative solutions for suspension types.

■ The dimensions given above are minimum values. ■ Please call us for non-standard components. ■ All measures are given in mm. ■ The span between supports should be 1.5m

E-LINE CCR

▶▶Fixing Elements

Ceiling Type Supports

CCR-Threaded Rod Two-Way For Edgewise Application To NPI Channel

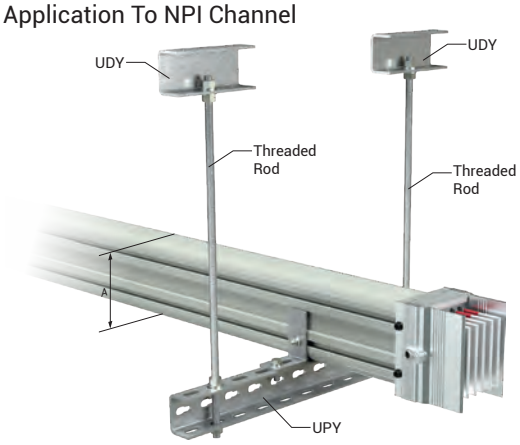

CCR-Threaded Rod Two-Way For Flatwise Application To NPI Channel

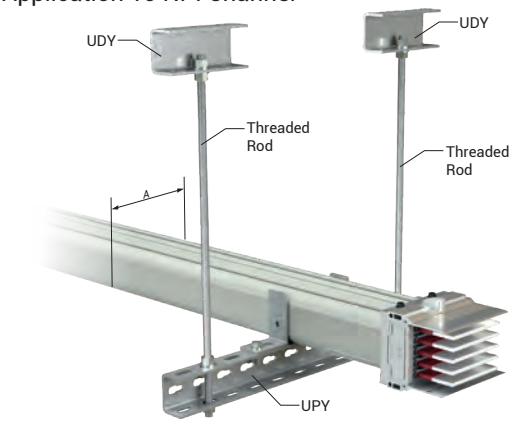

CCRA - Al Conductor		CCRC - Cu Conductor		Conductor	A (mm)	Description	UPY L (mm)	Order Code
Rated Current	Busbar Code	Rated Current	Busbar Code					
600	06	650	06	6x40	70	UPY 600	600	3004493
-	-	850	08	6x45	75	UPY 600	600	3004493
-	-	1000	10	6x55	85	UPY 600	600	3004493
800	09	1250	12	6x80	110	UPY 600	600	3004493
1000	10	-	-	6x95	125	UPY 600	600	3004493
1250	12	1600	16	6x110	140	UPY 600	600	3004493
-	-	2000	20	6x150	180	UPY 700	700	3004495
1600	16	-	-	6x160	190	UPY 700	700	3004495
2000	21	-	-	6x230	260	UPY 800	800	3004496
-	-	2500	25	2(6x80)	230	UPY 700	700	3004495
-	-	3200	32	2(6x110)	290	UPY 800	800	3004496
-	-	3400	34	2(6x125)	320	UPY 800	800	3004496
2500	25	-	-	2(6x130)	330	UPY 800	800	3004496
-	-	4000	40	2(6x140)	350	UPY 900	900	3004497
3000	31	-	-	2(6x160)	390	UPY 900	900	3004497
3300	33	4500	45	2(6x180)	430	UPY 1000	1000	3004498
3600	37	-	-	2(6x200)	470	UPY 1000	1000	3004498
4000	41	-	-	2(6x230)	530	UPY 1100	1100	3004499
4500	44	-	-	2(6x250)	570	UPY 1100	1100	3004499
-	-	5000	50	3(6x125)	485	UPY 1000	1000	3004498
-	-	5750	57	3(6x160)	590	UPY 1100	1100	3004499
5000	50	6300	63	3(6x180)	650	UPY 1100	1100	3004499
5400	54	-	-	3(6x200)	710	UPY 1200	1200	3004500

UDY 150	150	3008376
BRA 14-05 Threaded Rod (M12)	500	5000026

CCR-L Support Set (“T” bolted)	2118621
CR-L Suspension Connection Kit(“T” boltless)	2054886
BRA 13 Extension Unit (M12)	1004282
BRA 9 Steel Dowel (M12)	5000022
M12 Steel Nut	1000964
M12 Washer	1000505

Supports

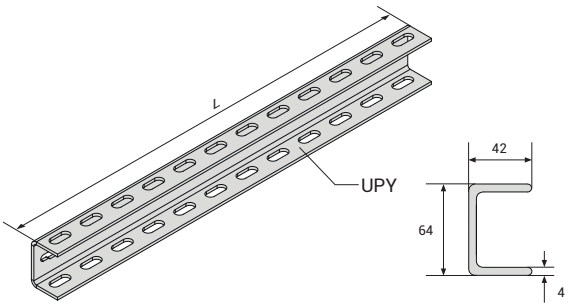

Fixing Elements

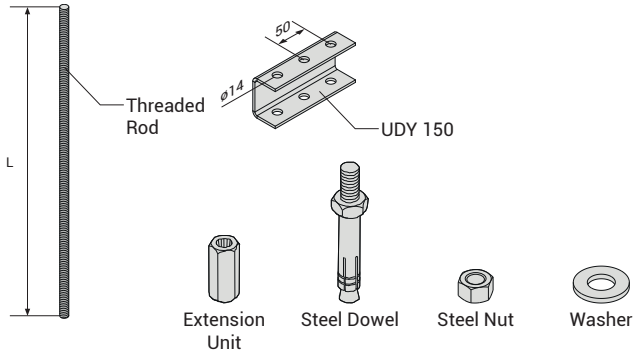

Diameter of the hole to be drilled
M12 / ø16

CCR-L Suspension Set

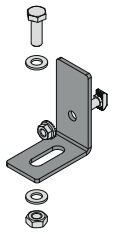

CR-L Suspension Connection Set

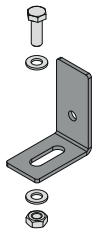

■ Please check our Suspension Systems (A-A) Catalogue to see our alternative solutions for suspension types.

■ The dimensions given above are minimum values. ■ Please call us for non-standard components. ■ All measures are given in mm. ■ The span between supports should be 1.5m

E-LINE CCR

▶▶Measuring a Special Length

After installation of standard busbar 3m lengths, you will be in need of special lengths which are smaller than 3m.The minimum length for these special elements can be 450mm. Please measure the lengths of these modules as shown below.

Length A is measured between housing of 2 busbars in mm. A. The special length is calculated by deducting 290mm from this measured length.

X = A - 290mm

X = Length of Special Busbar

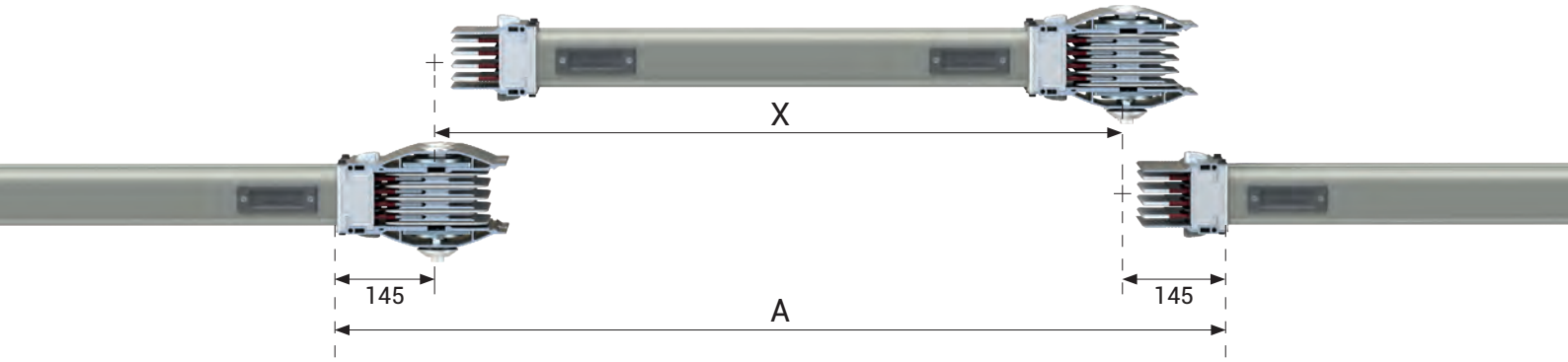

E-LINE CCR

▶▶Preparation of Joint Flex-Comp

The meger test must be carried out before casting. If Flex-Comp (A) and Flex-Comp (B) are stored in a cold environment, they should be kept in a warm environment one day before casting (> 20 °C). Ambient temperature during casting should be 5 °C < T casting < 35 °C.

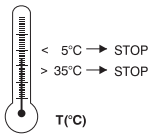

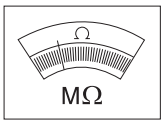

≥ 1MΩ OK
< 1MΩ NOT OK

Preparation of Flex-Comp

Flex-Comp A

Flex-Comp B

Add Flex-Comp (B) product into Flex-Comp (A).
One set is 3.5 kg. The required kg values for filling the joints according to their cross-section are indicated in the table next to it. The number of sets to be prepared should be calculated based on the number of joints in the assembly time.

Amount of Resin to be Used

CCRA - Al Conductor		CCRC - Cu Conductor					
Rated Current	Busbar Code	Rated Current	Busbar Code	Conductor	3 Conductor (kg)	4 Conductor (kg)	4½ - 5 Conductor (kg)
600	06	650	06	6x40	1,1	1,3	1,4
-	-	850	08	6x45	1,2	1,4	1,7
-	-	1000	10	6x55	1,2	1,5	1,5
800	09	1250	12	6x80	1,4	1,6	1,8
1000	10	-	-	6x95	1,5	1,8	2,0
1250	12	1600	16	6x110	1,6	1,9	2,1
-	-	2000	20	6x150	1,9	2,3	2,6
1600	16	-	-	6x160	2,0	2,4	2,7
2000	21	-	-	6x230	2,5	2,9	3,3
-	-	2500	25	2(6x80)	2,3	2,7	3,0
-	-	3200	32	2(6x110)	2,8	3,3	3,5
-	-	3400	34	2(6x125)	3,1	3,6	4,0
2500	25	-	-	2(6x130)	3,2	3,8	4,1
-	-	4000	40	2(6x140)	3,3	3,9	4,2
3000	31	-	-	2(6x160)	3,7	4,3	4,9
3300	33	4500	45	2(6x180)	4,2	4,7	5,3
3600	37	-	-	2(6x200)	4,4	5,1	5,7
4000	41	-	-	2(6x230)	4,7	5,4	5,9
4500	44	-	-	2(6x250)	4,8	5,5	6,0
-	-	5000	50	3(6x125)	4,5	5,2	5,7
-	-	5750	57	3(6x160)	5,4	6,2	6,9
5000	50	6300	63	3(6x180)	6,1	7,0	7,6
5400	54	-	-	3(6x200)	6,7	7,6	7,8

CCR
Flex-Comp Mixer

Mix the mixture with a beater at low speed for at least 30sec - 1 minutes until it is homogeneous.

Description	Order Code
CCR Flex-Comp Mixer	5002396

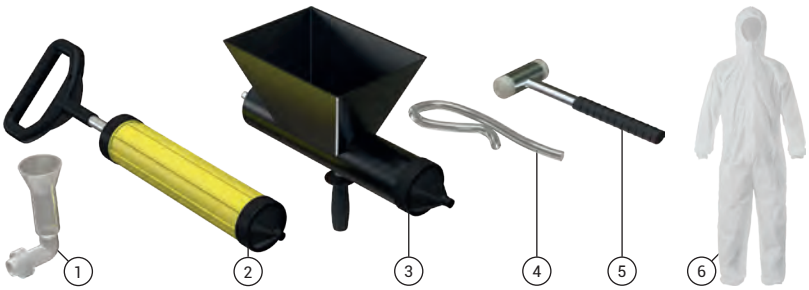

Casting Materials

No	Description	Order Code
1	CCR Level Check Pipe	3271279
2	CCR Injection Pomp	3254100
3	Flex-Comp Casting Apparatus	5003447
4	Flex-Comp Transparent Hose Set	5003607
5	CR Plastic Hammer	5000310
6	Disposable Protective Overall	5003622

E-LINE CCR

▶▶Installation / Horizontal

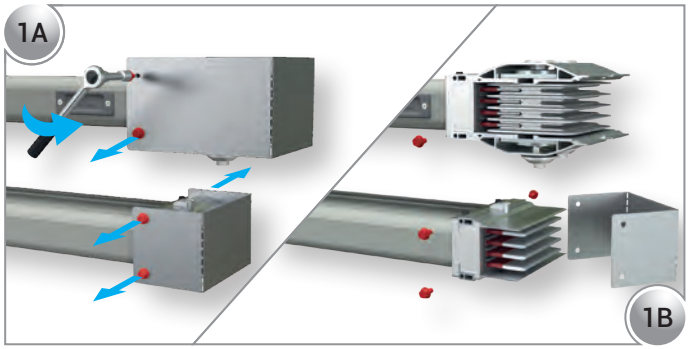

Remove the busbar protection covers by unscrewing the bolts

Remove the nut locking cover.

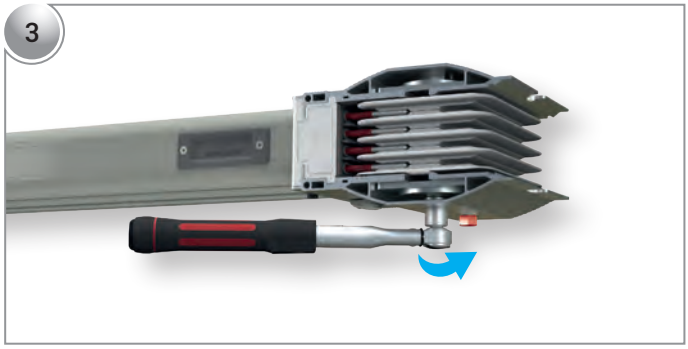

Loosen the block splice nuts.

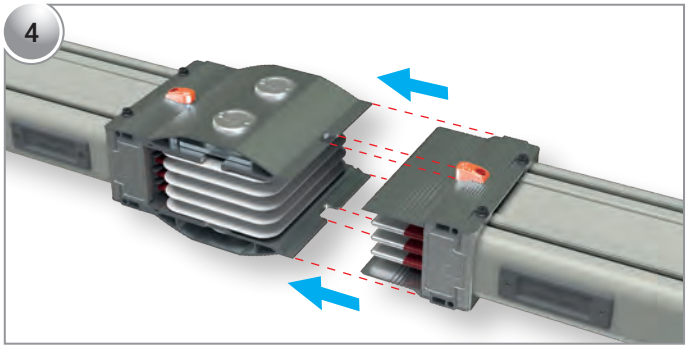

Verify the orientation and compatibility of the busbars and alignment components to be added. Connect the busbars with the small alignment components on top.

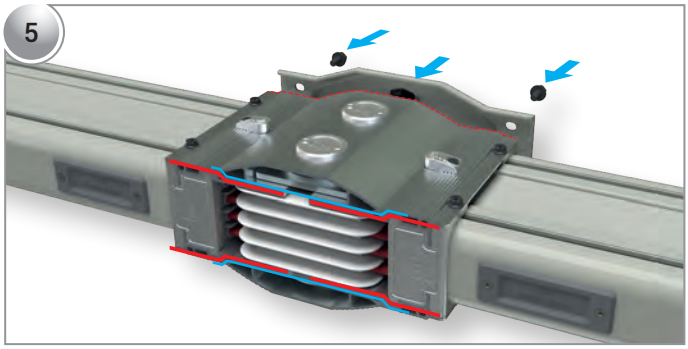

Install the block joint cover to align the busbars, tightening the cover bolts to a moderate torque. Adjust until the busbars fit perfectly into the alignment slots.

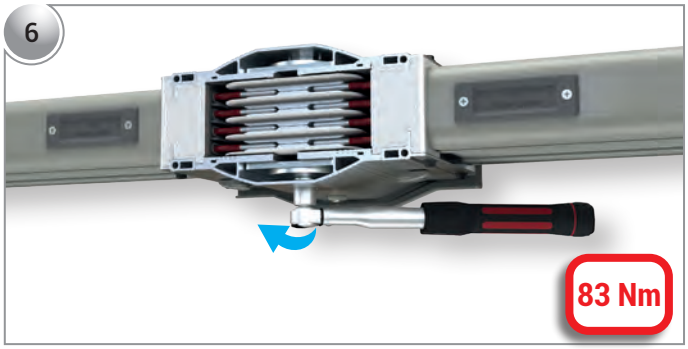

After verifying alignment, torque the block joint nuts to 83 Nm.

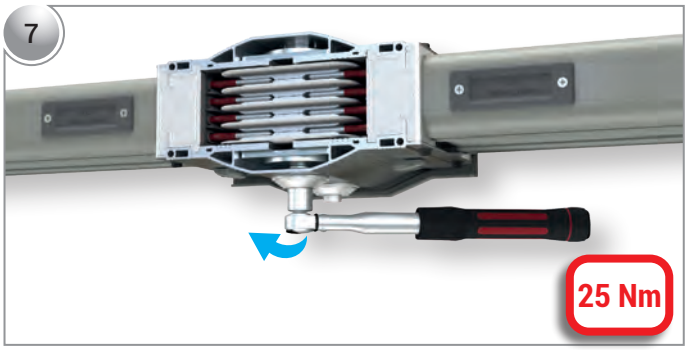

Reinstall the nut locking covers and torque with 25 Nm.

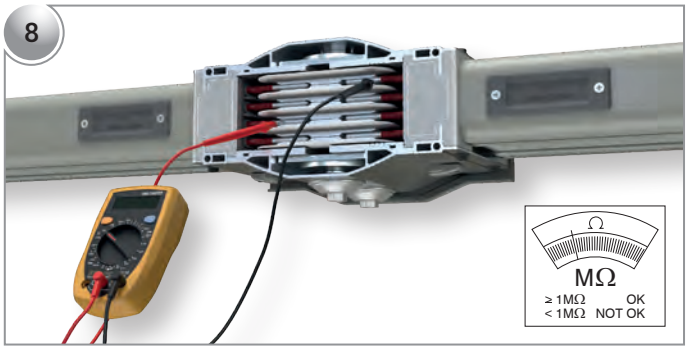

Perform an insulation resistance test between all phases at the installed block joint point.

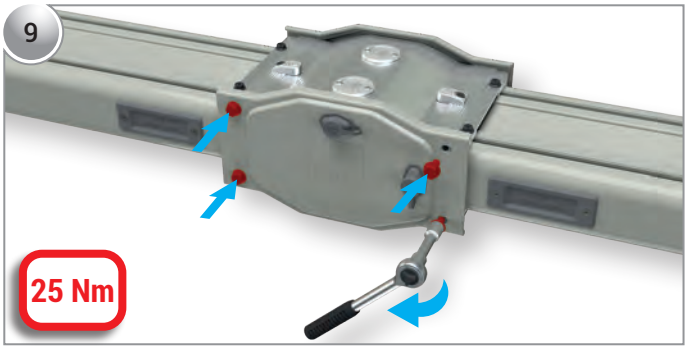

Install the other block joint cover and torque its bolts to 25 Nm.

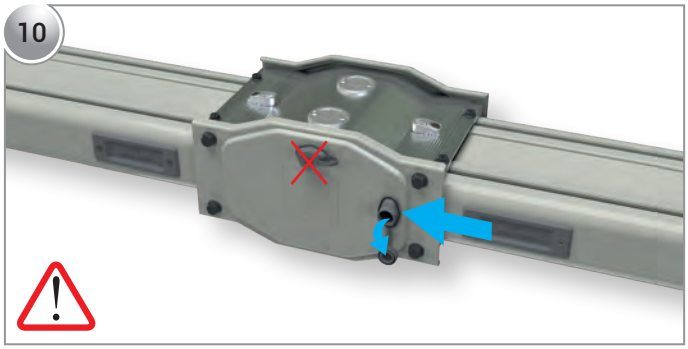

Remove the plastic cover from the casting area as shown in the visual.

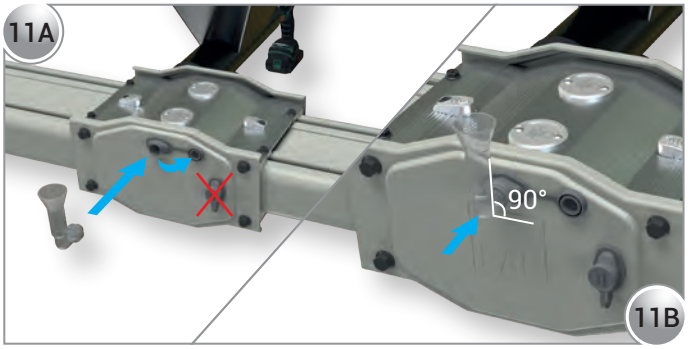

Open the plastic cover on the opposite side of the block joint to be cast, and install the CCR Block Joint Casting Level Control Plastic.
Attention: The level control plastic must be oriented 90° upwards.

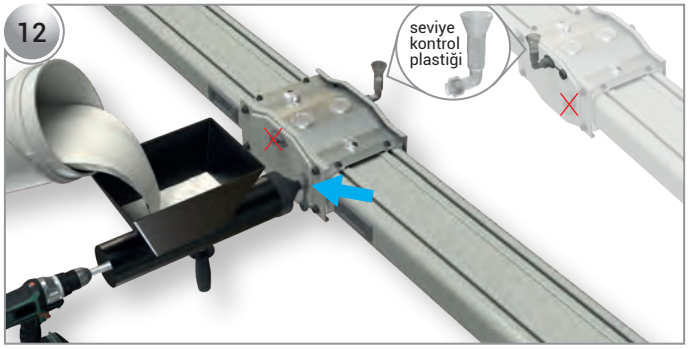

Inject material through the filling hole as shown. Continue filling until Flex-Comp is visible inside the level control plastic.
Attention: Check the Flex-Comp level in the level control plastic. Add more Flex-Comp if it drops.

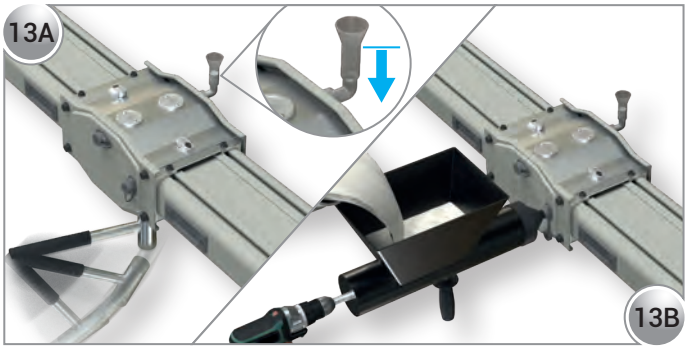

After the initial filling, tap the busbar block joint from underneath with a plastic mallet. If a drop in the Flex-Comp level is observed in the level control plastic, continue the filling process.
Attention: Refilling the process until the Flex-Comp level stabilizes.

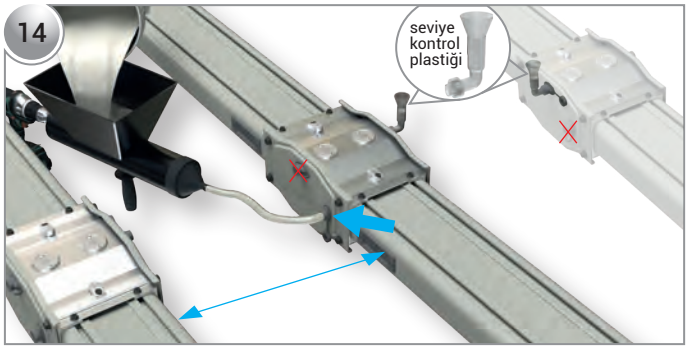

Use a transparent hose in confined spaces to complete the filling process through the indicated filling hole. Continue filling until Flex-Comp is visible inside the control plastic, and apply step 13.

Once the injection process is complete, close the plastic cover and finalize the installation.

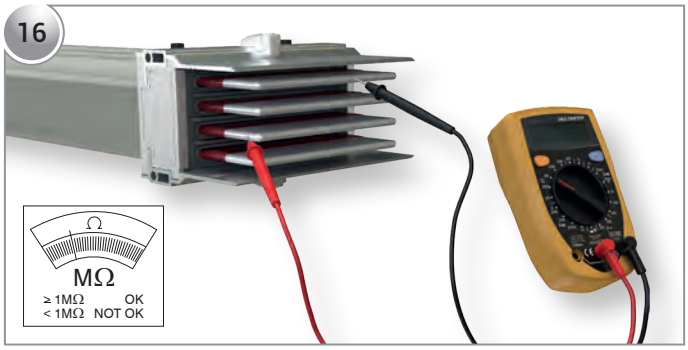

An insulation resistance test must be conducted at least 24 hours after the procedure is completed.

E-LINE CCR

▶▶Installation / Edgewise

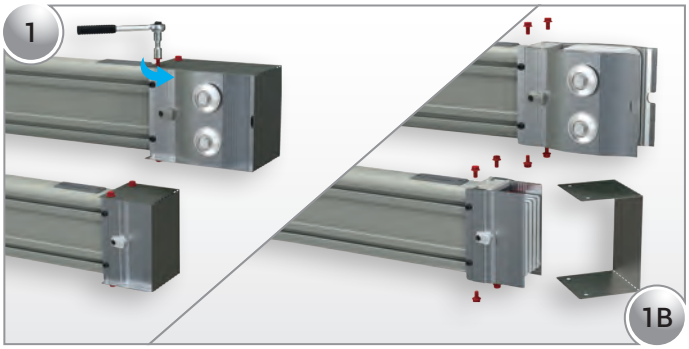

Remove the busbar protection covers by unscrewing the bolts.

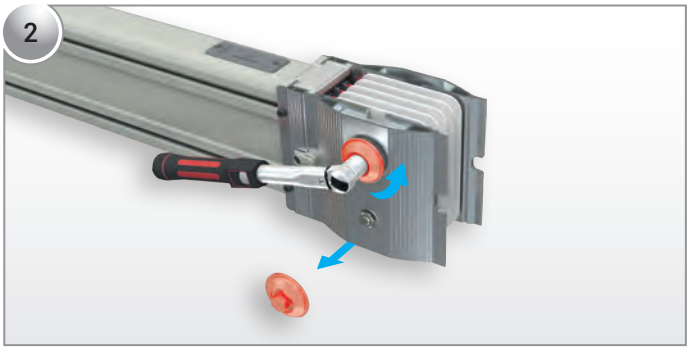

Remove the nut locking cover.

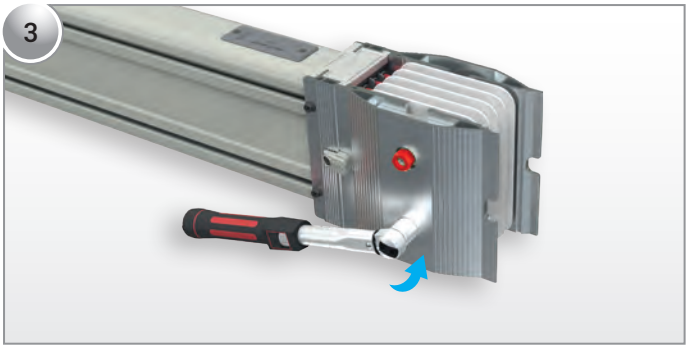

Loosen the block joint nuts.

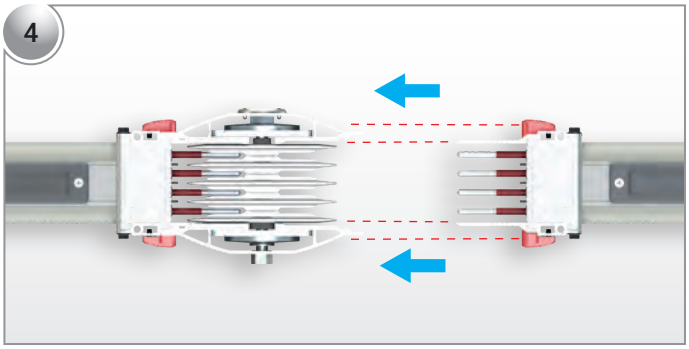

Verify the orientation and compatibility of the busbars and alignment components to be added. Connect the busbars with the small alignment components on top.

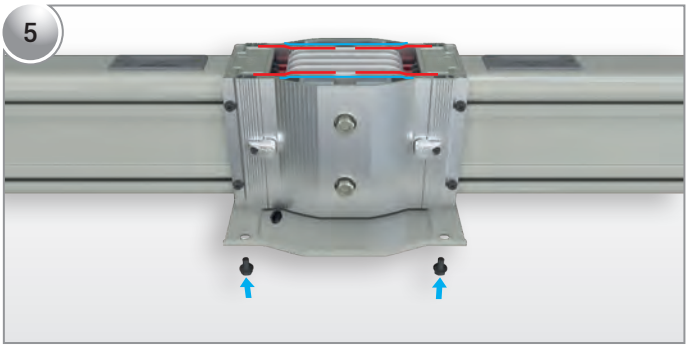

Install the lower block joint cover to align the busbars, tightening the cover bolts to a moderate torque. Adjust until the busbars fit perfectly into the alignment slots.

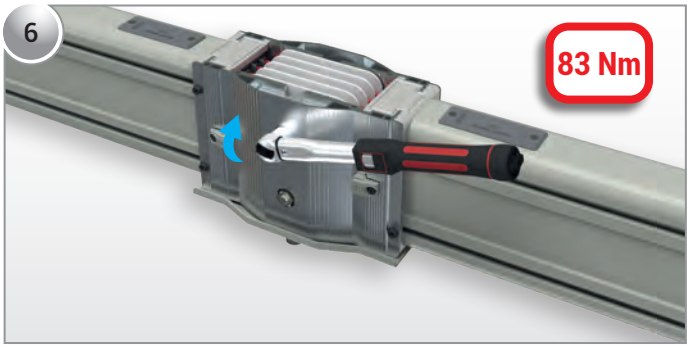

After verifying alignment, torque the block joint nuts to 83 Nm.

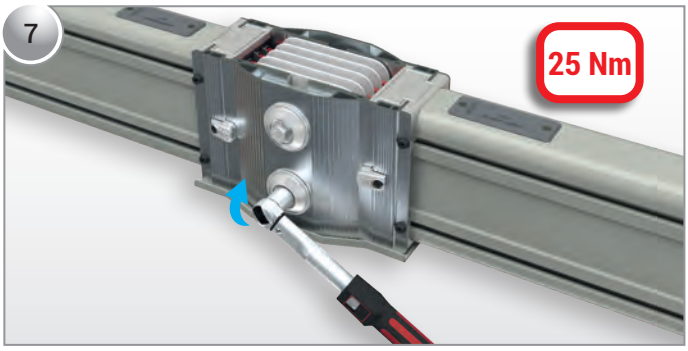

Reinstall the nut locking covers and torque with 25 Nm.

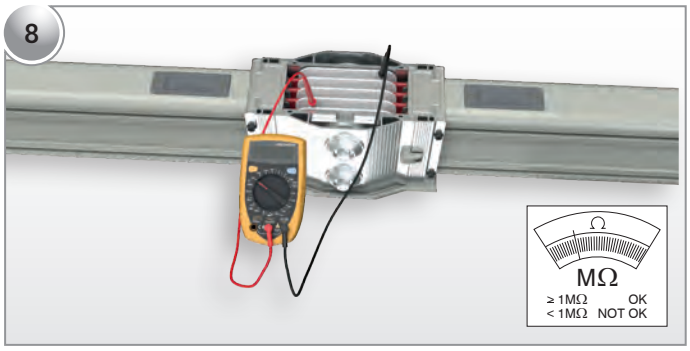

Perform an insulation resistance test between all phases at the installed block jiont point

E-LINE CCR

▶▶Installation / Edgewise

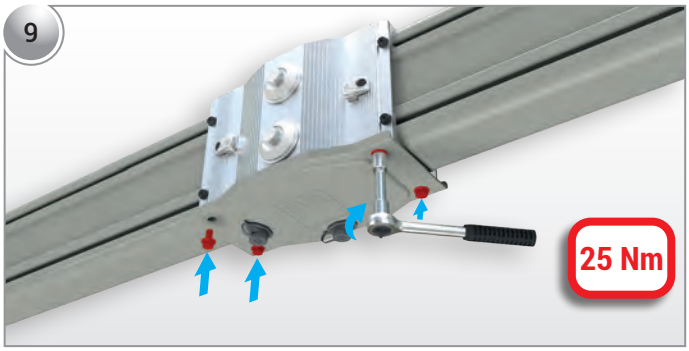

Torque the bolts of the lower block joint cover to 25 Nm.

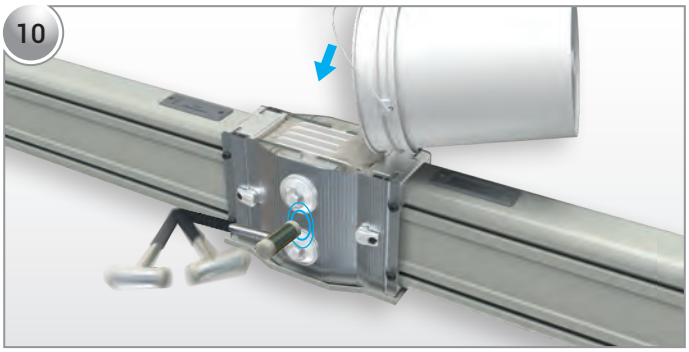

At the open end of the block joint cover, perform the Flex-Comp casting to the top level of the blocj joint. Apply vibration with a plastic mallet.

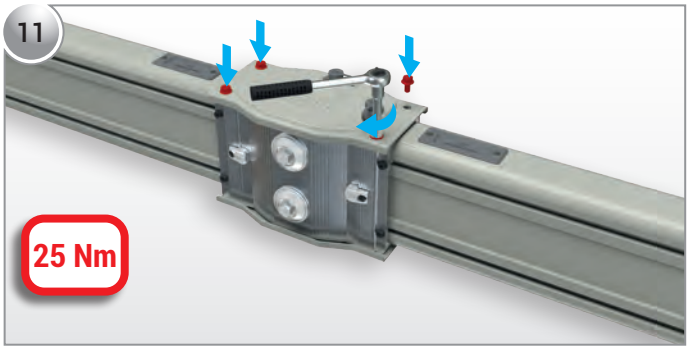

Install the top block joint cover and torque its bolts to 25 Nm.

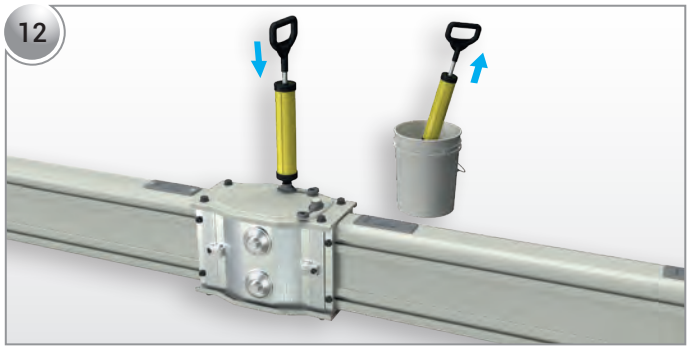

Ensure the injection piston is fitted to prevent leakage at the casting opening and inject Flex-Comp material into the block joint cavity using a lever. Continue injection until Flex-Comp is visible from the other end. Close the plastic cover and finalize the installation.

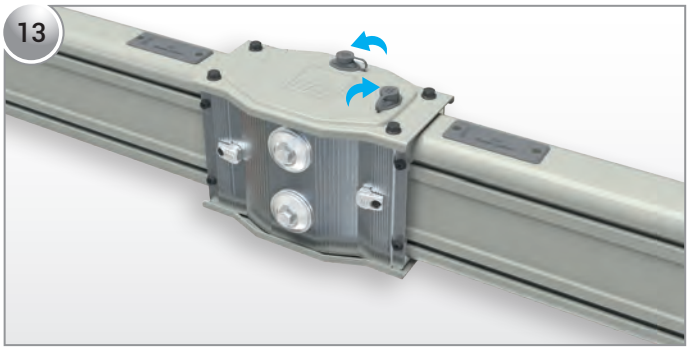

Once the injection process is complete, close the plastic cover and finalize the installation.

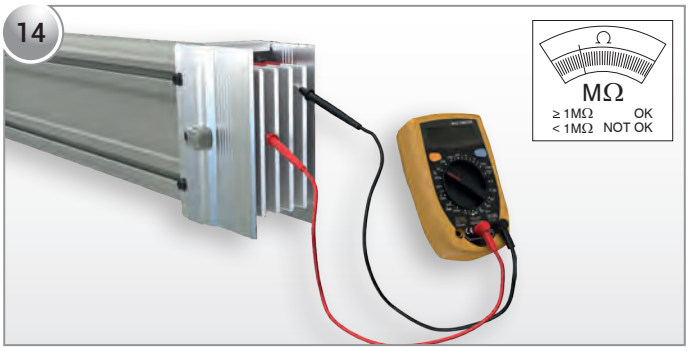

An insulation resistance test must be conducted at least 24 hours after the procedure is completed.

E-LINE CCR

▶▶Installation / Vertical

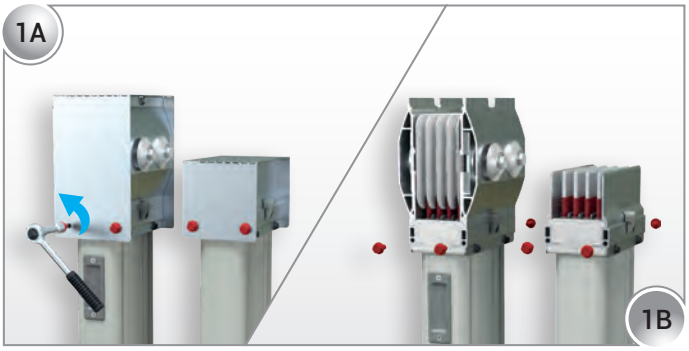

Remove the busbar protection covers by unscrewing the bolts

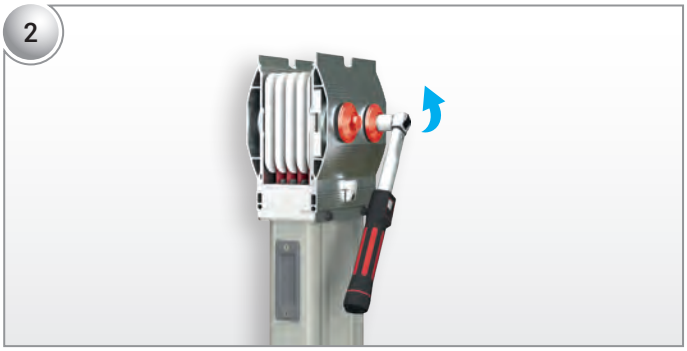

Remove the nut locking cover.

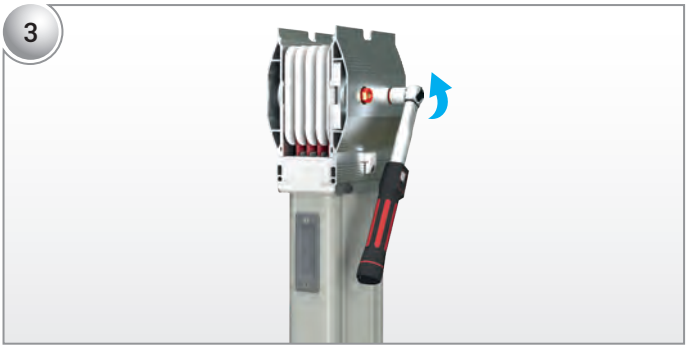

Loosen the block splice nuts.

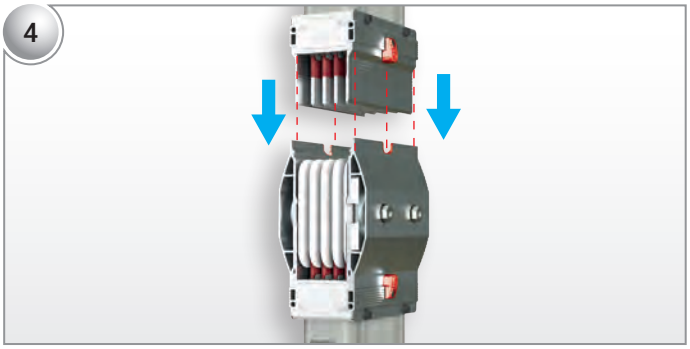

Verify the orientation and compatibility of the busbars and alignment components to be added. Connect the busbars with the small alignment components on top.

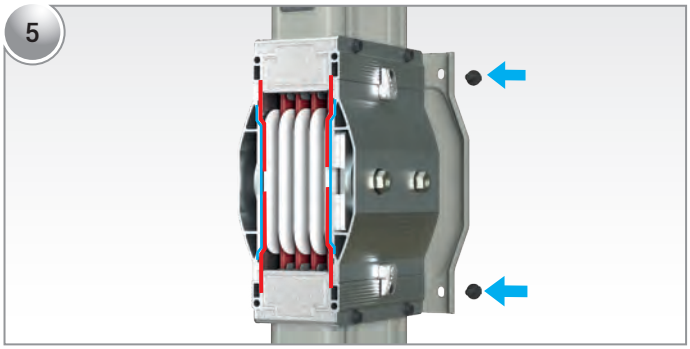

Install the block joint cover to align the busbars, tightening the cover bolts to a moderate torque. Adjust until the busbars fit perfectly into the alignment slots.

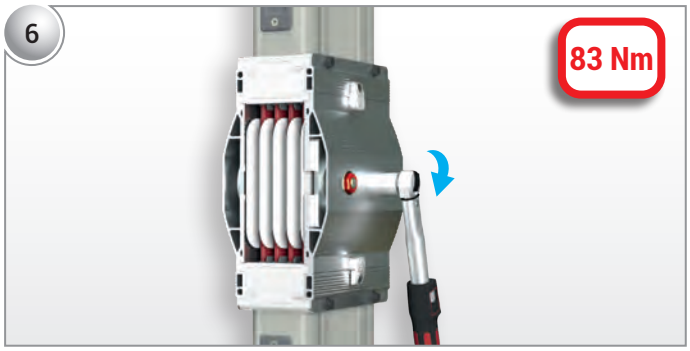

After verifying alignment, torque the block joint nuts to 83 Nm.

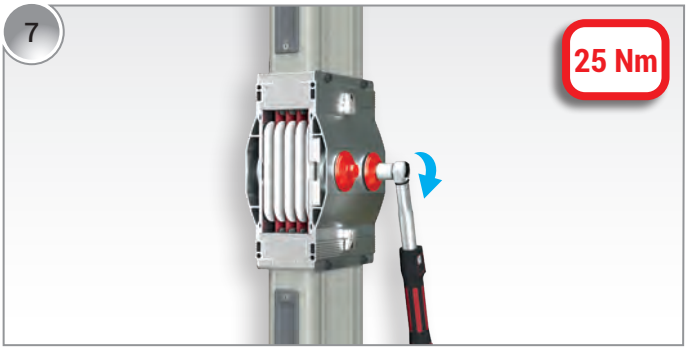

Reinstall the nut locking covers and torque with 25 Nm.

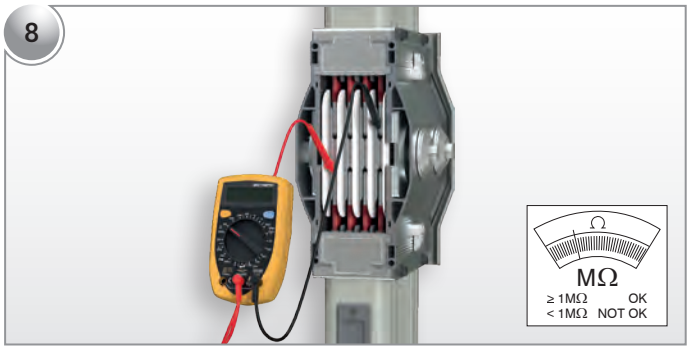

Perform an insulation resistance test between all phases at the installed block joint point.

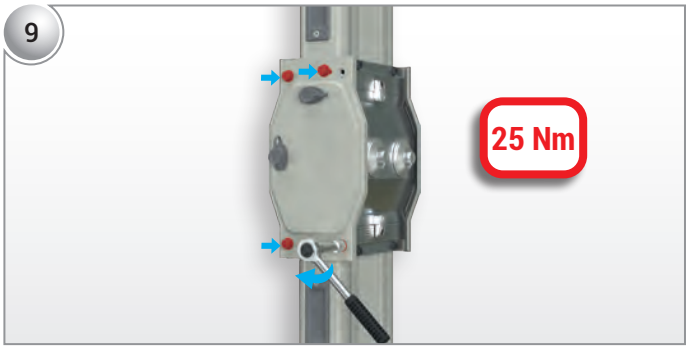

Install the other block joint cover and torque its bolts to 25 Nm.

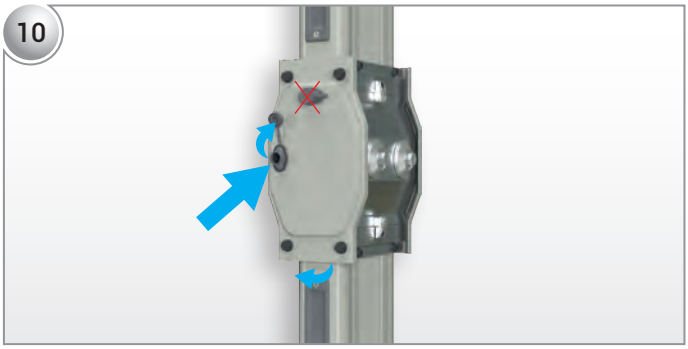

Remove the plastic cover from the casting area as shown in the visual.

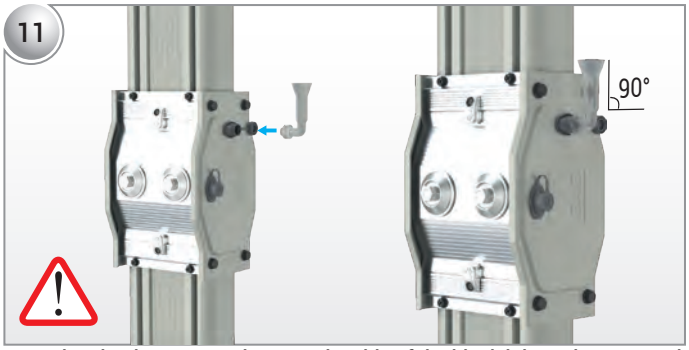

Open the plastic cover on the opposite side of the block joint to be cast, and install the CCR Block Joint Casting Level Control Plastic.
Attention: The level control plastic must be oriented 90° upwards.

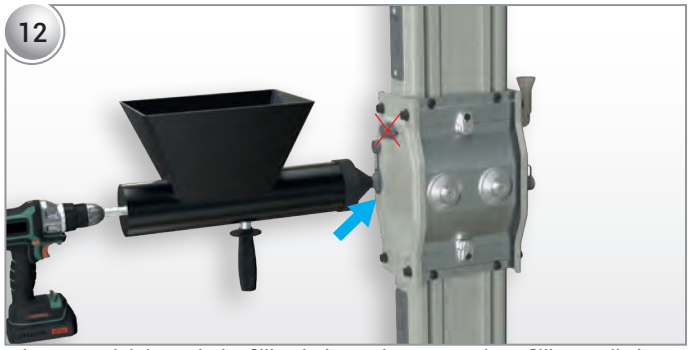

Inject material through the filling hole as shown. Continue filling until Flex-Comp is visible inside the level control plastic.
Attention: Check the Flex-Comp level in the level control plastic. Add more Flex-Comp if it drops.

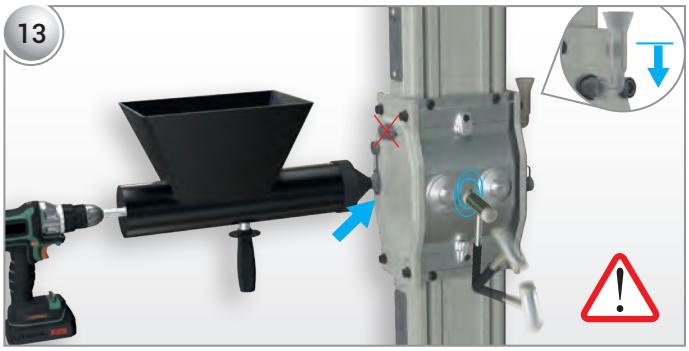

After the initial filling, tap the busbar block joint from underneath with a plastic mallet. If a drop in the Flex-Comp level is observed in the level control plastic, continue the filling process.
Attention: Refilling the process until the Flex-Comp level stabilizes.

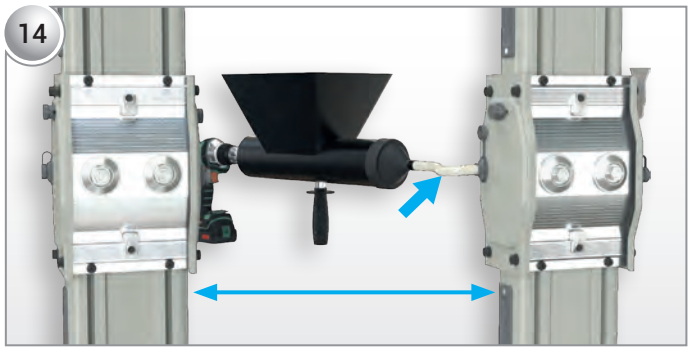

Use a transparent hose in confined spaces to complete the filling process through the indicated filling hole. Continue filling until Flex-Comp is visible inside the control plastic, and apply step 13.

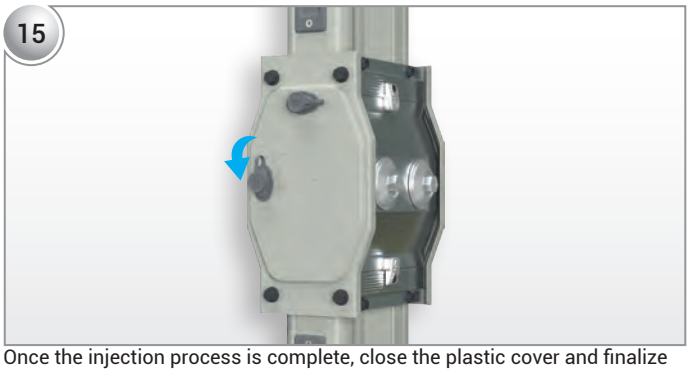

Once the injection process is complete, close the plastic cover and finalize the installation.

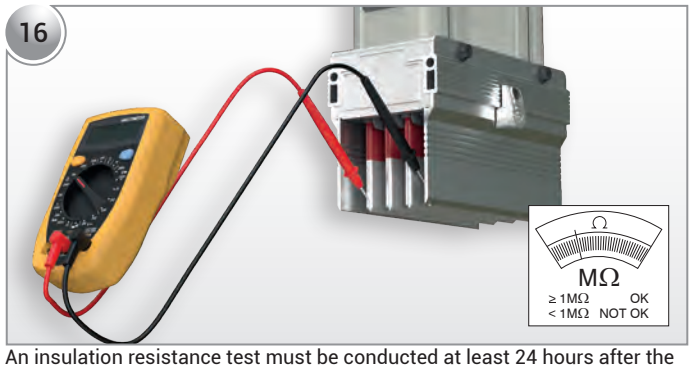

An insulation resistance test must be conducted at least 24 hours after the procedure is completed.

CE DECLARATION OF CONFORMITY

Product Group E-Line CCR Busbar Energy Distribution System

Manufacturer EAE Elektrik Asansor End. Insaat San. ve Tic. A.S.
Akcaburgaz Mahallesi, 3114. Sokak,
No:10, 34522 Esenyurt - Istanbul

The objects of the declaration described below is in conformity with the relevant Union harmonisation legislation. This declaration of conformity is issued under the sole responsibility of the manufacturer.

Standard:

TS EN 61439-6

Low-voltage switchgear and controlgear assemblies - Part 6: Busbar trunking systems (busways)

CE - Directive:
2014/35/EU "The Low Voltage Directive"

2014/30/EU "Electromagnetic Compatibility (EMC) Directive"

Technical Document Preparation Official ;

EAE Elektrik Asansor End. Insaat San. ve Tic. A.S.
Akcaburgaz Mahallesi, 3114. Sokak, No:10 34522 Esenyurt-Istanbul

Mustafa AKÇELİK

Date

03.03.2024

Document Authorized Signatory

Elif Gamze KAYA OK
Deputy General Manager

E-LINE CCR

▶▶Certificates

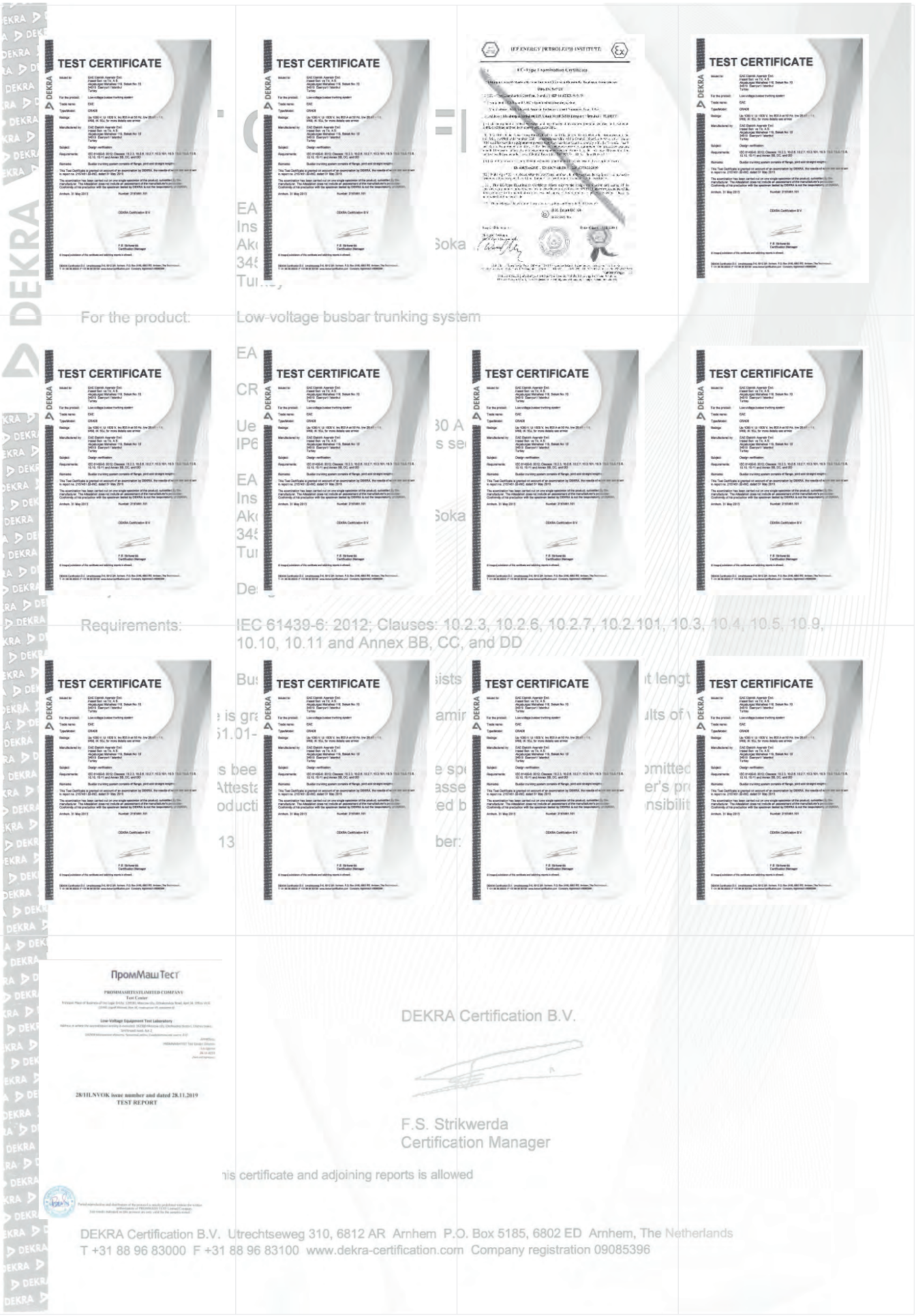

600A...6300A COMPACT BUSBAR PRODUCT OVERVIEW (E-LINE CCR)

1- Standards & Certification:

-Busbar trunking system shall be designed, type tested and, manufactured in accordance with the International standard IEC 61439-6. Type test shall be documented by independent and internationally accredited testing and certification bodies. Short circuit type tests shall be conducted by independent and accredited testing and certification bodies. The busbar system must have a certificate of compliance with standards.

2- General Structure Of The System

-The busbar system should be low impedance in accordance with the following characteristics. The tin coated conductors are arranged as a sandwich construction inside the resin body without any air gaps.

2.1- Electirical Characteristics

-Busbar systems nominal insulation voltage shall be 1000V
-As per ampere rates, minimum short circuit values shall be as given below;

For Aluminium Conductors;

600A	: 1 sec/rms	25kA, peak	52,5kA
800-1250A	: 1 sec/rms	35kA, peak	73,5kA
1600A	: 1 sec/rms	60kA, peak	132kA
2000A	: 1 sec/rms	80kA, peak	176kA
2500A and above	: 1 sec/rms	100kA, peak	220kA

For Copper Conductors;

650-850A	: 1 sec/rms	35kA, peak	73,5kA
1000A	: 1 sec/rms	50kA, peak	105kA
1250-1600-2000A	: 1 sec/rms	80kA, peak	176kA
2500-3200A	: 1 sec/rms	100kA, peak	220kA
3400A and above	: 1 sec/rms	120kA, peak	264kA

2.2- Housing

-The housing of the busbar system shall be manufactured with specially developed cast material.
-The structure of the busbar lengths shall have conductors tin plated along their complete length within the housing.
-Multi-path busbars should be combined in a single body so that they are not separated from each other.
-All aluminum surfaces in our product groups are plated with tin. When exposed to water and other corrosive liquids, Tin(II) Oxide and Tin(IV) Oxide (which typically appear as brown and white spots) may form. It is known that the formation of these oxides does not negatively affect the functional properties of the product.
-Up and down, right-left turn elements, "T" and offset elements, panel, transformer and cable connectors, termination, horizontal and vertical expansion elements should be standard in the Busbar trunking system. Special modules and different lengths busbar ducts that may be required during the application of the project must be manufactured in a short time in accordance with standard specifications and technology.
-If busbar runs pass through the building expansion joint a horizontal expansion element shall be used in the run. In addition horizontal expansion elements should be used every 40 m along a horizontal run.

2.3- Conductors and Phase Configuration

-Compact busbar system shall have aluminium conductors between 600A – 5400A.
-Compact busbar system shall have copper conductors between 650A – 6300A.
-Busbar system shall have the following number of conductors and wire configuration.

a) 3 Conductors
b) 4 Conductors
c) 4 ½ Conductors
d) 5 Conductors

-Neutral conductor shall have the same cross section as the phase conductor cross section.
-Aluminium conductors shall be of EC grade aluminium. Minimum conductivity shall be 34m/mm².Ω. All surfaces of aluminium conductors shall be tin plated.
-Copper conductors shall be minimum 99,95% electrolytic copper. Minimum conductivity shall be 56m/mm².Ω. all surfaces of electrolytic copper conductors shall be tin plated.

2.4- Insulation

-Busbars shall be insulated using a mixture of specially selected silica and calcite mixed with an electrical grade epoxy resin to make a superior composite material. This insulation material must have a high impact resistance against external impacts.

2.5- Modular Joint Construction

-The busbar lengths must be joined together with the joint's point drawer type modular block joint system by placing the conductors in the conductive socket in the block insert. Joint block insulators should be high strength CTP insulators. The joint block's centre bolt should be tightened with a torque wrench set to 83 Nm (60 lb ft) after installation.

2.6- Protection

-Protection degree of the housing and joints shall be IP68.

3- Installation and Commisioning

-The installation of the busbar system should be done in accordance with the type and current values shown in these plans in accordance with the electrical project, electrical single line schemes, layout plans and detailed busbar application projects, the manufacturer's installation instructions must be observed carefully during the assembly process. The central joint's bolts must be tightened with the appropriate torque wrench and the nut side of the bolt must be secured with the nut locking cap.
-After installation of the busbar system the installation should be checked for compliance with the manufacturer's instructions and the requirements of the project, an insulation test should be done. Insulation resistance between all conductors and body has to be bigger than 1 megaohm.

E-LINE CCR

▶▶Project Design Form

EAE ELEKTRİK

Component List

Item	Component	Quantity

Company :
Project :
Project No :

Prepared by

Name :
Date :
Signature :

Please duplicate this page for your own use.

EAE

EAE Elektrik A.S.
Head Office
Akcaburgaz Mahallesi,
3114. Sokak, No:10 34522
Esenyurt - Istanbul - TURKEY
Tel: +90 (212) 866 20 00
Fax: +90 (212) 886 24 20

EAE DL 3 Factory
Busbar
Gebze IV Istanbul Makine ve Sanayicileri
Organize Bolgesi, 6. Cadde,
No: 6 41455 Demirciler Koyu,
Dilovası - Kocaeli - TURKEY
Tel: +90 (262) 999 05 55
Fax: +90 (262) 502 05 69

Please visit our website for the updated version of our catalogues.
www.eaeelectric.com

Catalog 58-En. / Rev 09 500 ad. 28.01.2025
D.S.
EAE has full right to make any revisions or changes on this catalogue without any prior notice.