MAIN CATALOG 2025-1

About Us

EAE Group

Since 1973

EAE Group of Companies has started its journey in the electricity sector with EAE Elektrik, which has founded in 1973.

7 factories

EAE Group has a total of five factories in Istanbul and Kocaeli.

Export to more than 150 countries

EAE Group also has distributors and authorized dealers in more than 100 countries.

3 R&D Centers

There are 3 R&D centers in total, 2 of them are in Kocaeli.

360.000 m² closed area

EAE group is spread over a total closed area of 280.000 m² with its 5 factories.

EAE Globally...

EAE Elektroteknik A.Ş.

Active in energy distribution, industrial automation and data processing business EAE Elektroteknik A.Ş. is committed to continuous innovation to improve performance of installations in infrastructures as well as industrial and commercial sites.

Throughout its history it has constantly anticipated market changes by developing pioneering designs, providing solutions that are adapted to customer requirements and fully in compliance with international standards.

EAE Elektroteknik A.Ş. applies lean manufacturing methods throughout its entire operation and follows integrated management systems.

Employees

EAE Elektroteknik has more than 260 empolyees.

Manufacturing facility

EAE Elektroteknik has 20.000m^2 manufacturing facility.

Experience

EAE Elektroteknik has 20 years experience.

TS EN 62208
TS EN 61587-1
IEC 61439-1-2

EAE Elektroteknik

Our solutions…

PANELMASTER

Type Tested LV Switchgears

PanelMaster is a LV high current switchgear system designed in a modular structure for adapting to different applications needs. Modules are individually and the switchgear system as a whole is type tested and certified in internationally recognized laboratories. It has been certified by international DEKRA certification body for successfully passing all type tests prescribed by IEC 61439-1/2 standards up to Form 4B, with the highest technical values that businesses and facilities may need and with 6 different internationally accepted brands of switchgear equipment separately.

PanelMaster has also passed internal arc tests according to IEC 61641 standards and seismic tests to IEC 60068-3-3 standards and has been certified by DEKRA for internal arc testing and VIRLAB laboratories for seismic tests.

KabinPLUS

Information Technologies Solutions

KabinPLUS product family serves businesses in information technologies and comprises data cabinets, cooling solutions and wide range of related accessories.

KabinPLUS products designed to be used in system rooms and data centers comply with various internationally recognized standards like EN and UL. Their compatibility has been registered with the documents obtained from accredited laboratories.

Value added solutions with seismic resistance are also offered within the scope of KabinPLUS product family. KabinPLUS seismic solutions includes various products that comply with IEC 60068-3-3, IEC 60980 (Nuclear Power Plants) EN 61587-2, Telcordia Nebs GR63 Zone 4 standards.

EAE
ELEKTROTEKNİK

E-Kabin®

Type-Tested Empty Electrical Enclosures

E-Kabin LV electrical enclosures are type-tested in accordance with IEC 62208 standard to be used for various applications.

- Wall-Mounted Electrical Enclosures (E-Kabin M, O, E Series)
- Floor-Standing Electrical Enclosures (E-Kabin S, D, L Series)
- Outdoor Electrical Enclosures (E-Kabin H Series)
- Stainless-Steel Electrical Enclosures (E-Kabin X Series)
- Terminal Boxes (E-Kabin T Series)
- Monoblock Consoles (E-Kabin K Series)

General Features…

High Corrosion Resistance

Even if the product is painted, pre-galvanized steel sheet is used in all products of the E-Kabin brand.

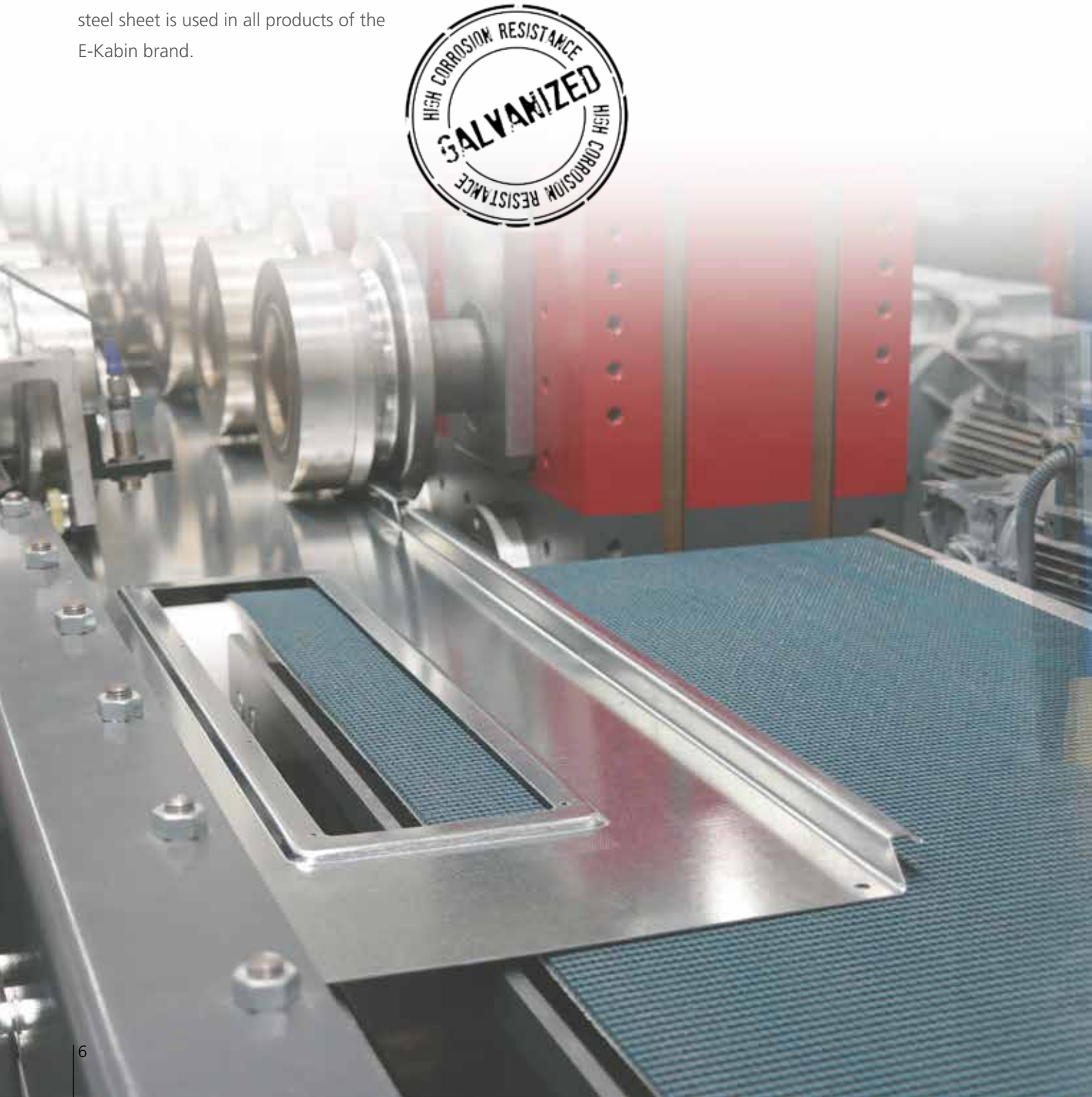

Simplicity

Symmetrical design
Single bolt type

In E-Kabin products, assembly works can be carried out using a single type of bolt. In this way, complexity is avoided, manufacturing processes are accelerated.

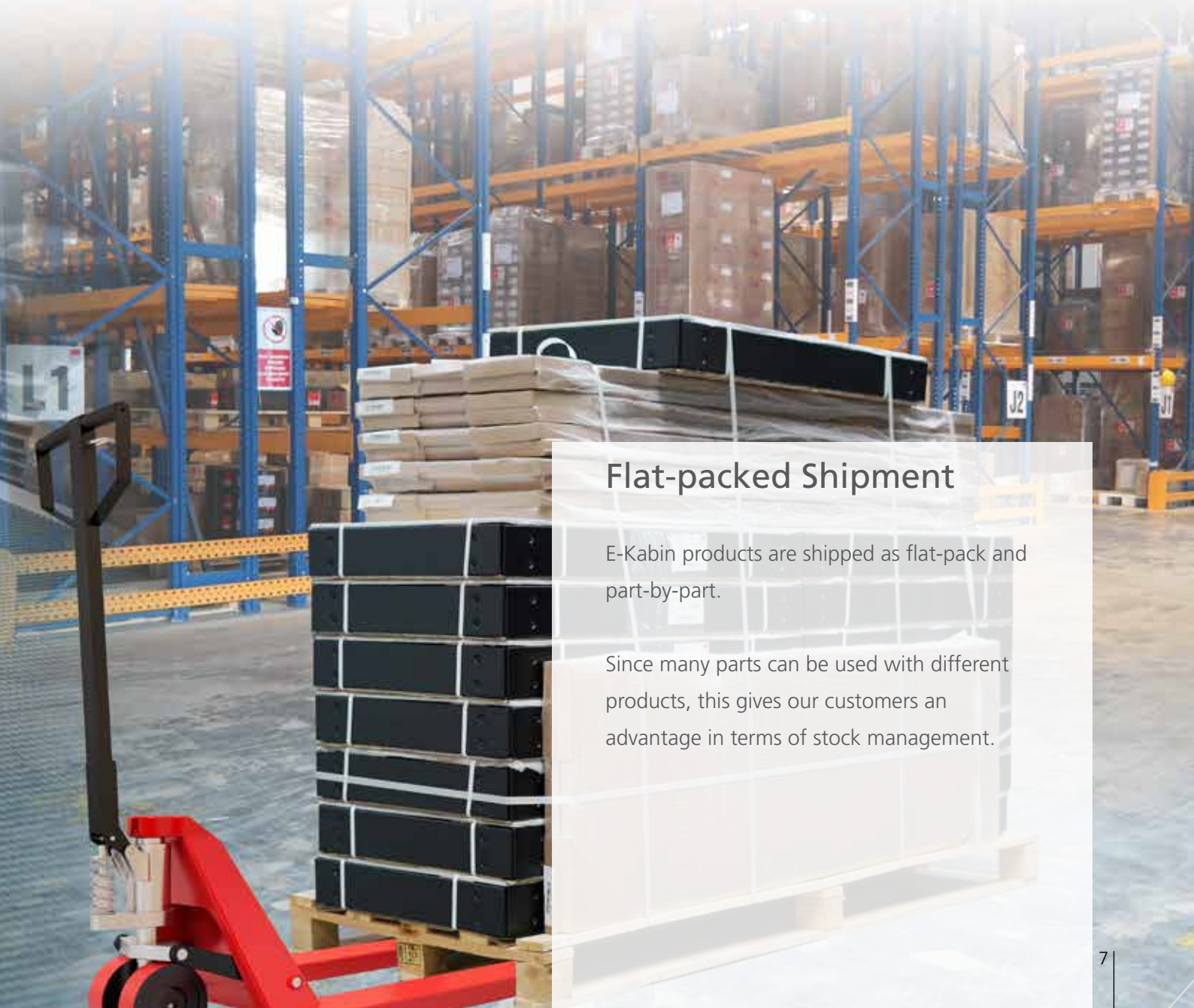

Flat-packed Shipment

E-Kabin products are shipped as flat-pack and part-by-part.

Since many parts can be used with different products, this gives our customers an advantage in terms of stock management.

EAE Elektroteknik reserves the right to make changes in the information contained in this catalog without notice.

CONTENTS

WALL-MOUNTED ENCLOSURES

O and M Series 11
HM Series Outdoor 19
XM Series Stainless Steel 25
E Series 31
Wall-Mounted Enclosure Accessories 37

TERMINAL BOXES

T Series 59
XT Series Stainless Steel 65
Terminal Box Accessories 69

CONSOLES

K Series 71
Console Accessories 75

FLOOR-STANDING ENCLOSURES

S Series 83
D Series 99
L Series 111
HS Series Outdoor - Modular 123
HF Series Outdoor - Monoblock 129
XS Series Stainless Steel - Modular 135
XH Series Stainless Steel - Monoblock 141
Floor-Standing Enclosure Accessories 147

WHITE PAPERS 217

WALL-MOUNTED ENCLOSURES

O SERIES - M SERIES

E-Kabin O and M Series
Electrical Enclosures

E-Kabin M Series wall-mounted enclosures are designed as general purpose electrical equipment enclosures for indoor applications. They have monoblock body structure and provide IP66 protection degree. The body and door are made of pre-galvanized sheet steel and painted with epoxy polyester powder coating.

Type of Mounting	: Wall-Mounted
Modularity	: Monoblock
Application	: Indoor
Protection Class	: IP 66
Paint	: Epoxy-Polyester Powder Paint
Colour	: Standard RAL 7035 (Grey Colour)
Environmental Class	: According to EN 60721 - 3 - 3 IE32
Standards	: IEC 61439-1, IEC 62208 IEC 60529, IEC 62262

Features

Support rails

Support rails increase the strength of the door and allow attachment of equipment such as cables and cable trays.

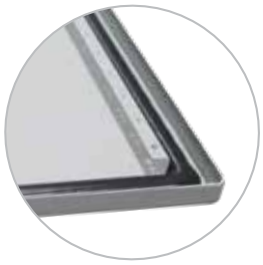

Polyurethane sealing gasket

Foam-in place gasket applied to the door does not lose its elasticity in time and provides protection against dust and water.

Useful lock system

The key, which is designed to be attached to the lock slot if needed, can also be used as a lock handle.

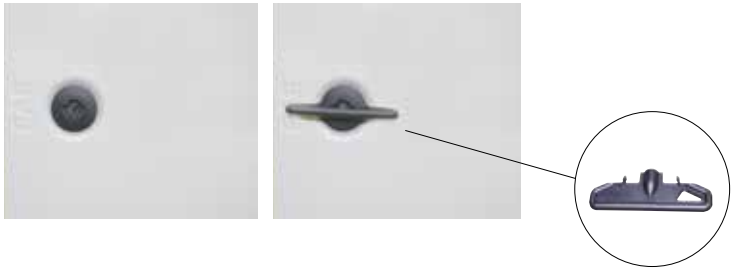

130° standard door opening

The door can be opened 130° wide with the standard hinge set, thus full access is provided during assembly.

180° Hinge accessory – optional –

The door can be opened 180° with the optional hinge set.

Changeable door opening direction

The door opening direction can be changed if it is needed.

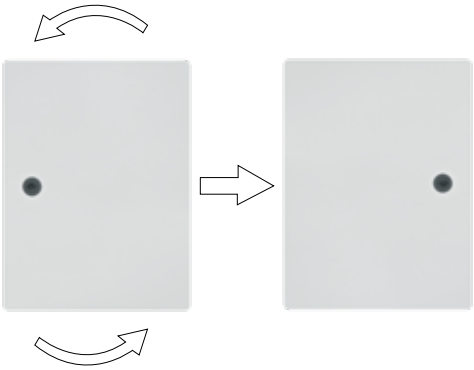

Useful bracket

With the bracket set, the enclosure can be fixed to the wall easily and quickly. The bracket kit is included in the standard supply content.

Order Codes For EO Series

1 Lock and 2 Hinges

2 Locks and 3 Hinges

Enclosure - With Mounting Plate

Enclosure Rated Height (A)	Enclosure Rated Width (B)	Enclosure Rated Depth (C)	Order Codes	Lock Quantity	Hinge Quantity
300	200	150	EO 30 20 15	1	2
	300	200	EO 30 30 20	1	2
400	300	150	EO 40 30 15	1	2
	300	200	EO 40 30 20	1	2
	400	200	EO 40 40 20	1	2
500	350	150	EO 50 35 15	1	2
	350	200	EO 50 35 20	1	2
	400	200	EO 50 40 20	1	2
	500	200	EO 50 50 20	1	2
600	400	150	EO 60 40 15	1	2
	400	200	EO 60 40 20	1	2
	400	300	EO 60 40 30	1	2
	500	300	EO 60 50 30	1	2
	600	200	EO 60 60 20	1	2
	600	250	EO 60 60 25	1	2
700	500	200	EO 70 50 20	2	3
	500	300	EO 70 50 30	2	3
800	600	200	EO 80 60 20	2	3
	600	250	EO 80 60 25	2	3
	600	300	EO 80 60 30	2	3

Note: Standard supply content: Mounting plate, bracket set, gland plate and earthing cable.

Dimensions

GLAND PLATE COMBINATIONS

For 150 mm Depth

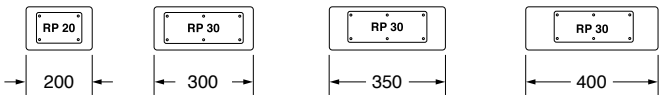

For 200, 250 and 300 mm Depth

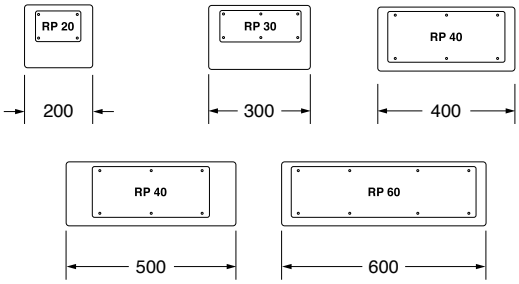

FLANGE OPENINGS

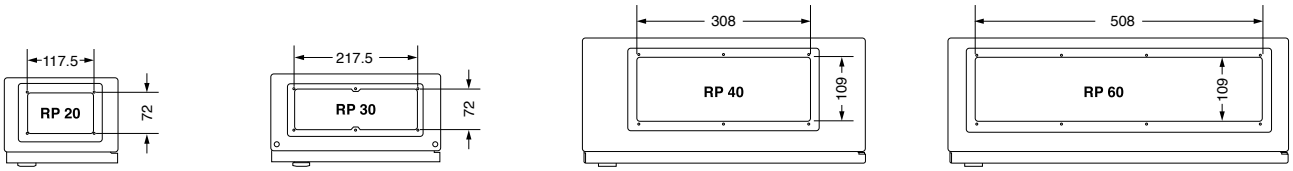

Unless otherwise specified, all dimensions are in mm.

Dimensions

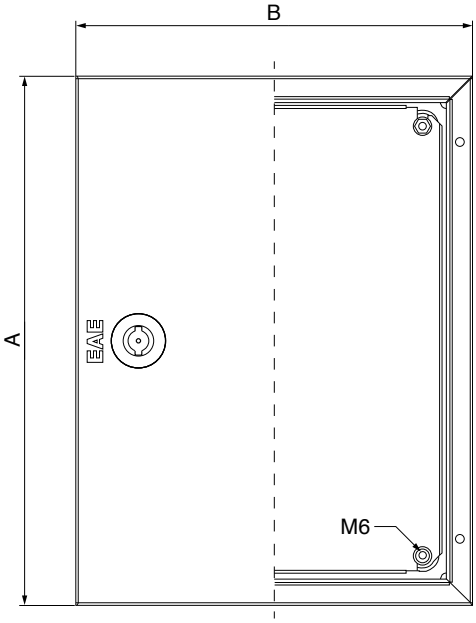

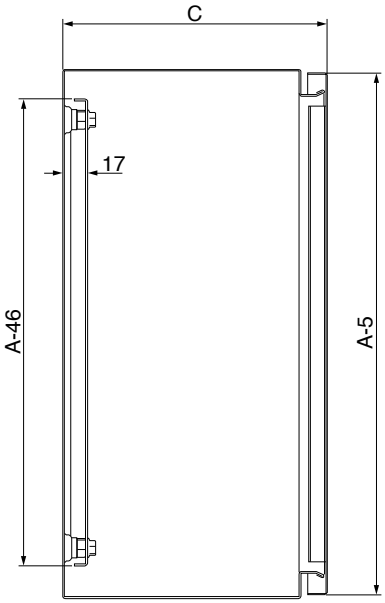

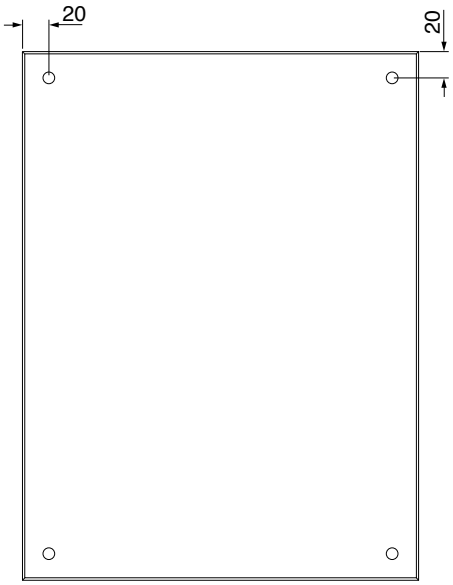

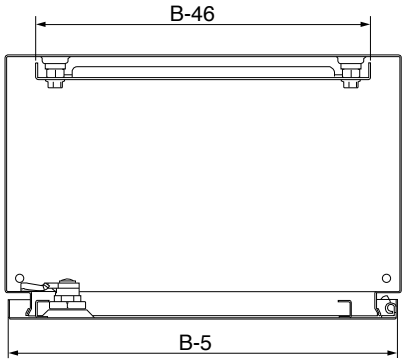

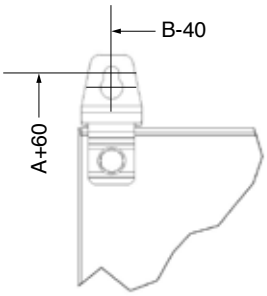

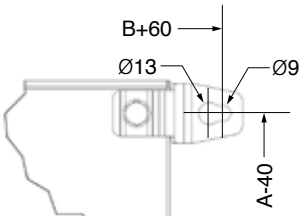

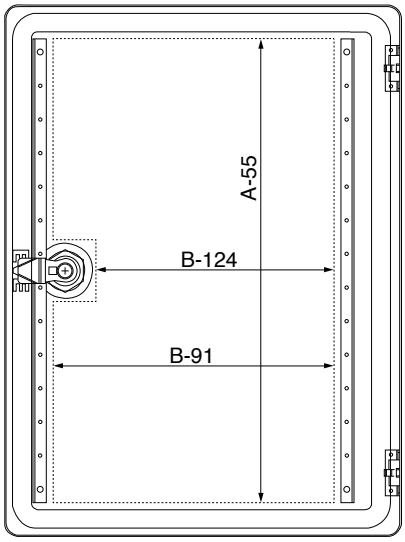

Usable area

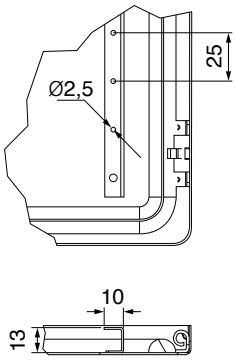

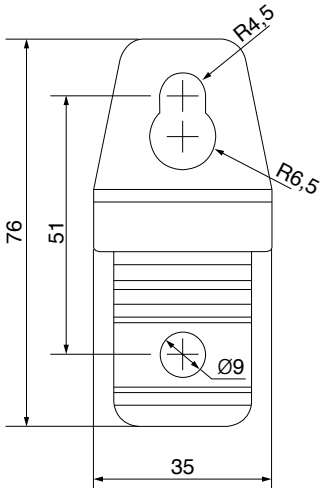

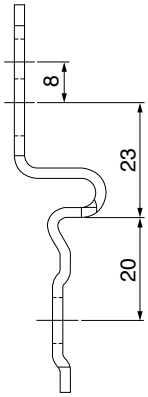

Unless otherwise specified, all dimensions are in mm.

Order Codes For EM Series

2 Locks and 3 Hinges

Enclosure - With Mounting Plate, Plain Door

Enclosure Rated Height (A)	Enclosure Rated Width (B)	Enclosure Rated Depth (C)	Order Codes	Lock Quantity	Hinge Quantity
800	800	300	EM 80 80 30 D	2	3
900	600	300	EM 90 60 30 D	2	3
1000	600	300	EM 100 60 30 D	2	3
	700	300	EM 100 70 30 D	2	3
	800	300	EM 100 80 30 D	2	3
	800	400	EM 100 80 40 D	2	3
1200	600	300	EM 120 60 30 D	2	3
	800	300	EM 120 80 30 D	2	3
	800	400	EM 120 80 40 D	2	3

Note: You can get information from your Customer Representative for large quantities and different sizes.

Protection class is IP 54 for products with overlapping doors

Overlapping, Plain Door

Enclosure Rated Height (A)	Enclosure Rated Width (B)	Enclosure Rated Depth (C)	Order Codes
1000	1000	300	EM 100 100 30
1200	1000	300	EM 120 100 30
	1000	400	EM 120 100 40
	1200	300	EM 120 120 30

Note: Standard supply content: Mounting plate, bracket set, gland plate and earthing cable.

Note: You can get information from your Customer Representative for large quantities and different sizes.

Dimensions

GLAND PLATE COMBINATIONS

For 300 and 400 mm Depth

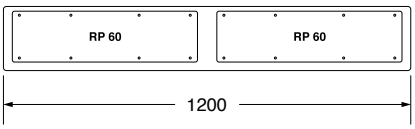

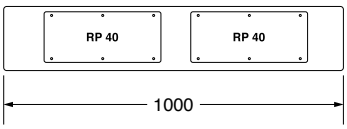

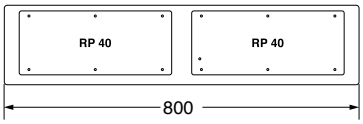

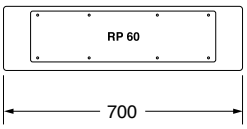

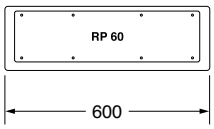

FLANGE OPENINGS

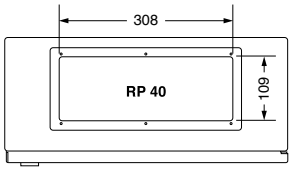

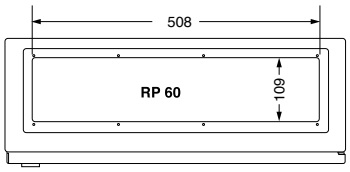

Unless otherwise specified, all dimensions are in mm.

Dimensions

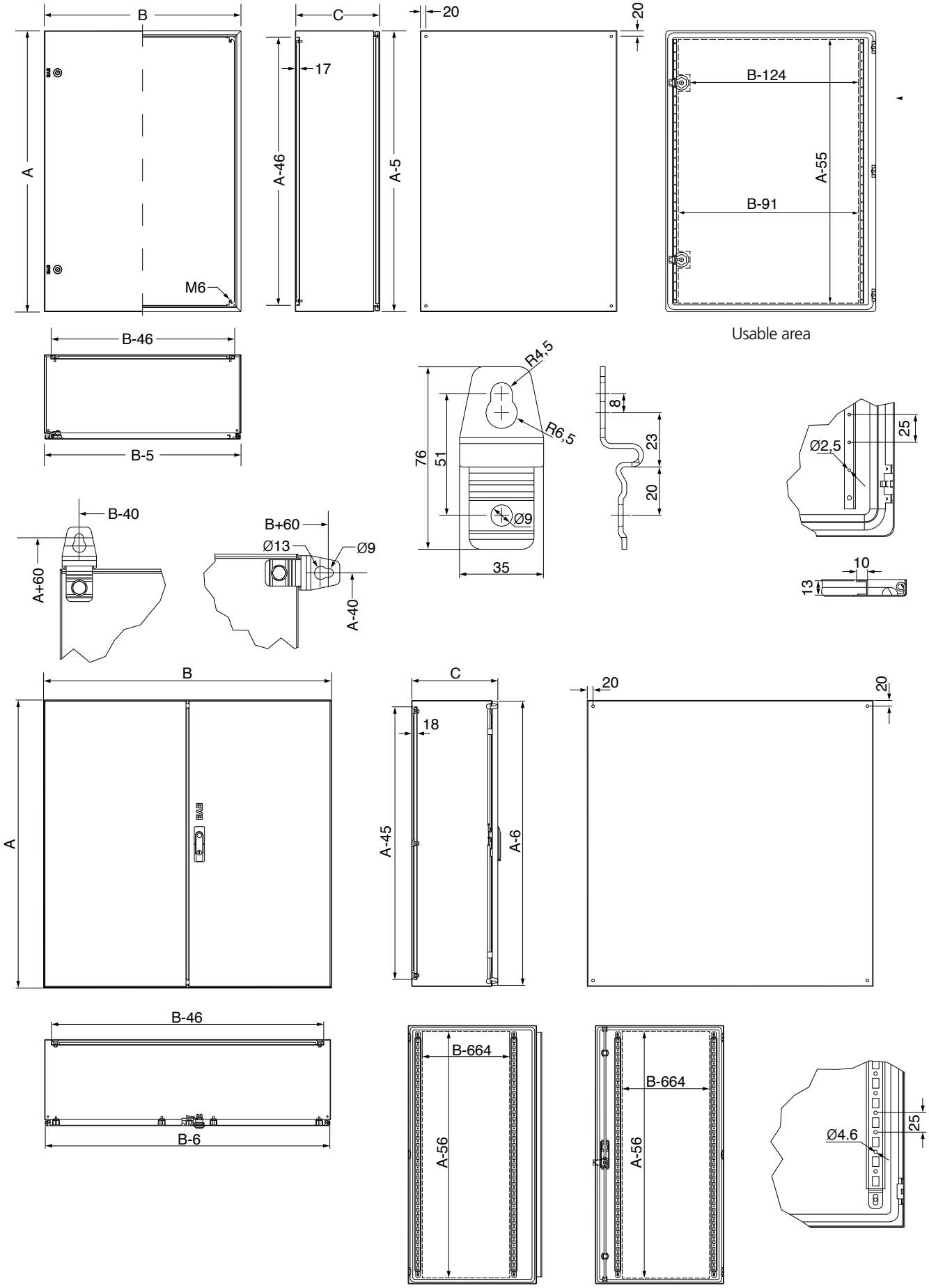

Unless otherwise specified, all dimensions are in mm.

WALL-MOUNTED ENCLOSURES

HM SERIES
Outdoor

E-Kabin HM Series
Outdoor Electrical Enclosures

E-Kabin HM Series wall-mounted enclosures are designed as general purpose electrical equipment enclosures for outdoor applications. They have monoblock body structure and provide IP66 protection degree. All parts that come into contact with external enviroment are made of pre-galvanized sheet steel and coated first with primer paint then with electrostatic powder paint. Welded surfaces have smooth and clean appearance.

Type of Mounting	: Wall-Mounted
Modularity	: Monoblock
Application	: Outdoor
Protection Class	: IP 66
Paint	: High corrosion resistant paint according to ISO 12944-2
Colour	: Standard RAL 7035 (Grey Colour)
Environmental Class	: According to EN 60721 - 3 - 3 IE37
Standards	: IEC 61439-1, IEC 62208 IEC 60529, IEC 62262

Features

Stainless-steel hinge

Hinge body and pin made of stainless-steel material are used as standard.

Polyurethane sealing gasket

Foam-in-place gasket, does not lose its elasticity over time and provides protection against dust and water.

Asymmetrical canopy

It allows the use of bracket for wall mounting. Thanks to their reverse angle edge design above door threshold, rain water flows out of the enclosure.

Standard Door Opening 130°

The door can be opened 130° wide with the standard hinge set, thus full access is provided during assembly.

Stainless-steel bracket accessory

Stainless Bracket Accessory provides additional protection against corrosion.

Plinth

In applications where mounting on the floor is required, plinth set accessory can be used additionally.

Order Codes

Enclosure Rated Height (A)	Enclosure Rated Width (B)	Enclosure Rated Depth (C)	Order Codes	Lock Quantity	Hinge Quantity
700	500	300	HM 70 50 30	2	3
900	600	300	HM 90 60 30	2	3
1000	800	400	HM 100 80 40	2	3
1200	800	400	HM 120 80 40	2	3

Note: Asymmetrical canopy module and mounting plate are included in standard supply content.

Dimensions

GLAND PLATE COMBINATIONS

For 300 and 400 mm Depth

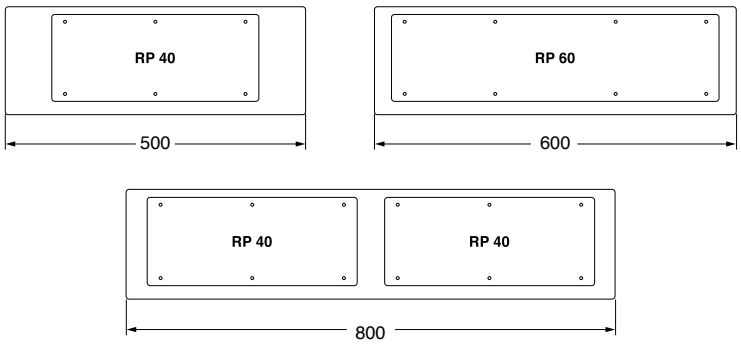

FLANGE OPENINGS

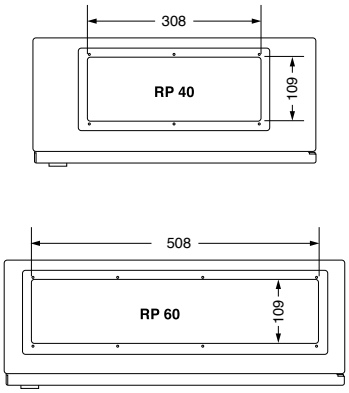

Unless otherwise specified, all dimensions are in mm.

Dimensions

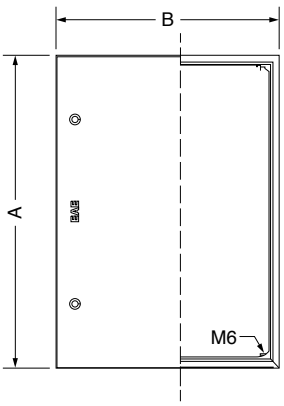

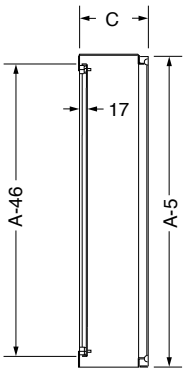

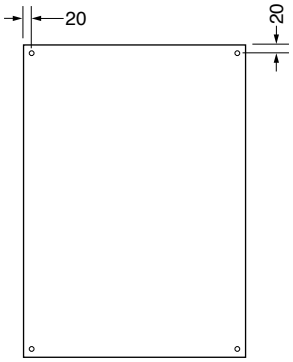

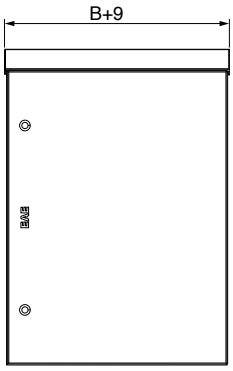

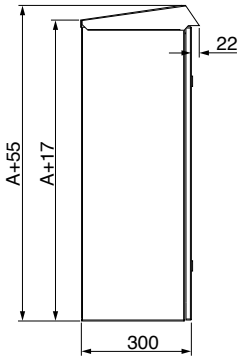

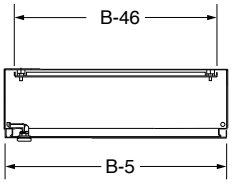

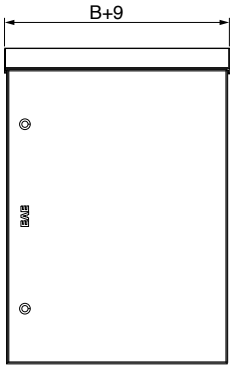

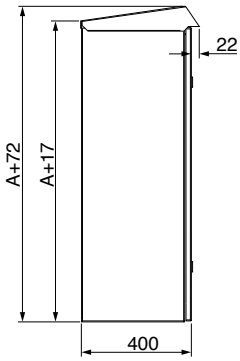

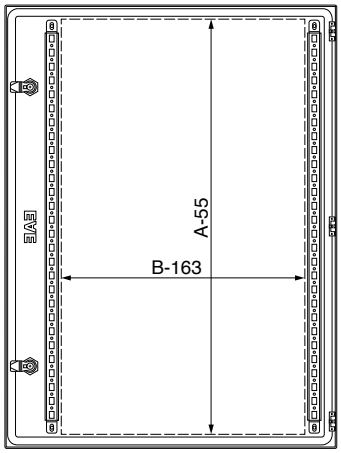

Usable area

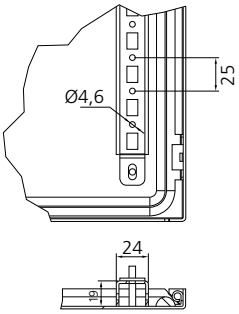

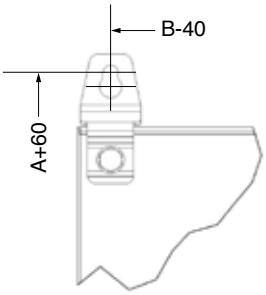

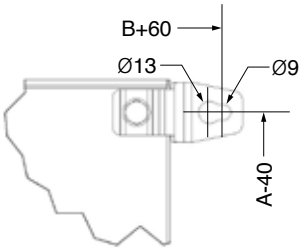

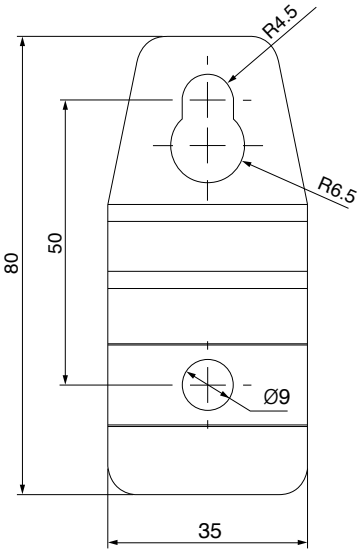

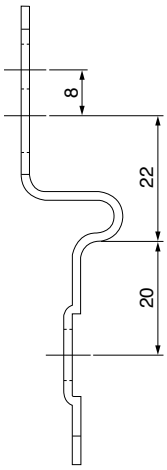

Unless otherwise specified, all dimensions are in mm.

WALL-MOUNTED ENCLOSURES

XM SERIES
Stainless Steel

E-Kabin XM Series
Stainless-Steel Electrical Enclosures

E-Kabin XM Series wall mounted stainless electrical enclosures are designed as general purpose electrical equipment enclosures for indoor and outdoor applications. They have monoblock body structure and provide IP66 protection degree. Standard production does not include painting process. However, custom-made production, varnished or painted in the desired RAL code is possible.

XM Series stainless-steel enclosures can be produced with AISI 304 or 316 grade raw material. Plastic lock is used in XM Series. Optionally, a lock made of 304 or 316 grade stainless-steel can also be used.

All E-Kabin interior accessories are designed to be suitable for use in stainless-steel enclosures as well.

While keeping standard product design unchanged, size modification, material thickness modification and cut-outs can be applied if requested.

Type of Mounting	: Wall-Mounted
Modularity	: Monoblock
Application	: Indoor, Outdoor
Protection Class	: IP 66
Standards	: IEC 61439-1, IEC 62208 IEC 60529, IEC 62262
Environmental Class	: According to EN 60721 - 3 - 3 IE37
Material	: AISI 304 or 316 grade stainless-steel
Lock Set	: Plastic - standard Stainless-steel - optional

Features

Polyurethane sealing gasket

Foam-in-place gasket, does not lose its elasticity over time and provides protection against dust and water.

Asymmetrical canopy

It allows the use of bracket for wall mounting. Thanks to their reverse angle edge design above door threshold, rain water flows out of the enclosure.

Optional Stainless-steel lock

Instead of plastic lock, which has high chemical resistance, optionally AISI 316 grade stainless-steel lock can be used. Mounted AISI 316 grade lock do not exceed the door level.

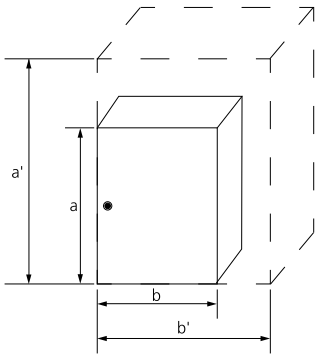

a'= a+n.50 mm
b'= b+n.50 mm

Possibility of custom size production

Non-standard, custom size manufacturing is possible.

* For details, you can get information from your Customer Representative.

Stainless-steel hinge

Hinge body and pin made of Stainless-Steel material are used as standard.

Possibility of custom-made cut-outs

Custom-made cut-out processing on the door and body is applicable.

Clean surface texture

In the production of stainless-steel enclosures, the welding process is applied in a way that does not leave any traces. Thus, clean and smooth surface appearance has been provided for welded surfaces.

Optional stainless-steel bracket

With bracket set enclosure mounting on the wall can be done easily and quickly. Thanks to 90° swivel feature of the bracket, it's positioning can be chosen either horizontally or vertically. Bracket set is not included in standard supply content, it should be ordered separately.

Order Codes

XM Series Stainless-Steel Monoblock Enclosures

Enclosure Rated Height (A)	Enclosure Rated Width (B)	Enclosure Rated Depth (C)	Order Codes (304)	Order Codes (316)	Lock Quantity	Hinge Quantity
400	300	200	XM 40 30 20 D 304	XM 40 30 20 D 316	1	2
	600	200	XM 40 60 20 D 304	XM 40 60 20 D 316	1	2
500	400	200	XM 50 40 20 D 304	XM 50 40 20 D 316	1	2
600	400	200	XM 60 40 20 D 304	XM 60 40 20 D 316	1	2
	600	300	XM 60 60 30 D 304	XM 60 60 30 D 316	1	2
700	500	200	XM 70 50 20 D 304	XM 70 50 20 D 316	1	2
	500	300	XM 70 50 30 D 304	XM 70 50 30 D 316	1	2
800	600	200	XM 80 60 20 D 304	XM 80 60 20 D 316	2	3
	600	300	XM 80 60 30 D 304	XM 80 60 30 D 316	2	3
	800	200	XM 80 80 20 D 304	XM 80 80 20 D 316	2	3
1000	600	200	XM 100 60 20 D 304	XM 100 60 20 D 316	2	3
	600	300	XM 100 60 30 D 304	XM 100 60 30 D 316	2	3
	800	200	XM 100 80 20 D 304	XM 100 80 20 D 316	2	3
1200	600	300	XM 120 60 30 D 304	XM 120 60 30 D 316	2	3

Note: Standard lock is plastic. If stainless-steel lock is requested, please indicate it in your purchase order. Mounting plate is included in the standard supply content. Bracket set is not included in the standard supply content.

XM Series Stainless-Steel Monoblock Enclosures With Asymmetrical Canopy

Enclosure Rated Height (A)	Enclosure Rated Width (B)	Enclosure Rated Depth (C)	Order Codes (304)	Order Codes (316)	Lock Quantity	Hinge Quantity
400	300	200	XM 40 30 20 AC 304	XM 40 30 20 AC 316	1	2
	600	200	XM 40 60 20 AC 304	XM 40 60 20 AC 316	1	2
500	400	200	XM 50 40 20 AC 304	XM 50 40 20 AC 316	1	2
600	400	200	XM 60 40 20 AC 304	XM 60 40 20 AC 316	1	2
	600	300	XM 60 60 30 AC 304	XM 60 60 30 AC 316	1	2
700	500	200	XM 70 50 20 AC 304	XM 70 50 20 AC 316	1	2
	500	300	XM 70 50 30 AC 304	XM 70 50 30 AC 316	1	2
800	600	200	XM 80 60 20 AC 304	XM 80 60 20 AC 316	2	3
	600	300	XM 80 60 30 AC 304	XM 80 60 30 AC 316	2	3
	800	200	XM 80 80 20 AC 304	XM 80 80 20 AC 316	2	3
1000	600	200	XM 100 60 20 AC 304	XM 100 60 20 AC 316	2	3
	600	300	XM 100 60 30 AC 304	XM 100 60 30 AC 316	2	3
	800	200	XM 100 80 20 AC 304	XM 100 80 20 AC 316	2	3
1200	600	300	XM 120 60 30 AC 304	XM 120 60 30 AC 316	2	3

Note: Standard lock is plastic. If stainless-steel lock is requested, please indicate it in your purchase order. Mounting plate is included in the standard supply content. Bracket set is not included in the standard supply content.

Unless otherwise specified, all dimensions are in mm.

Dimensions

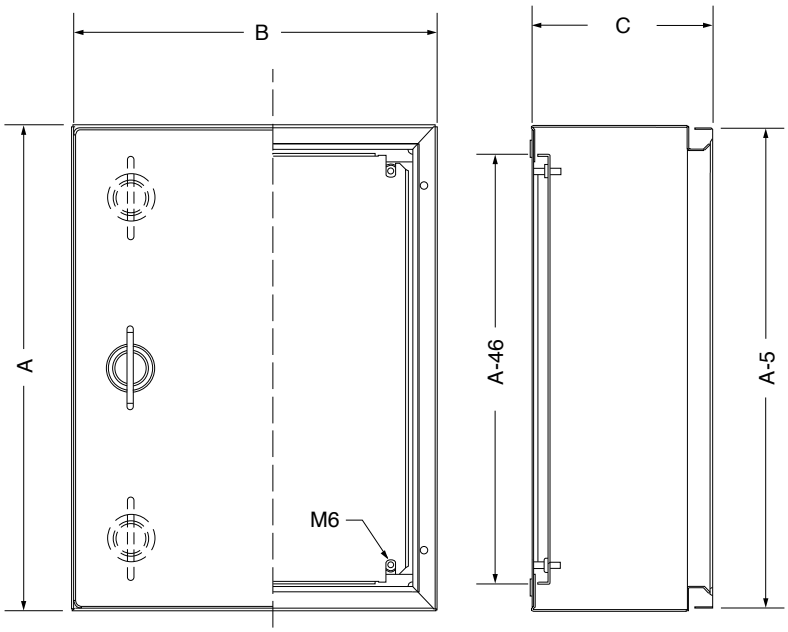

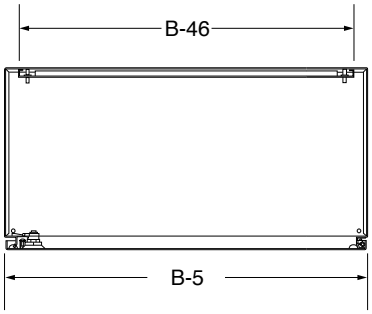

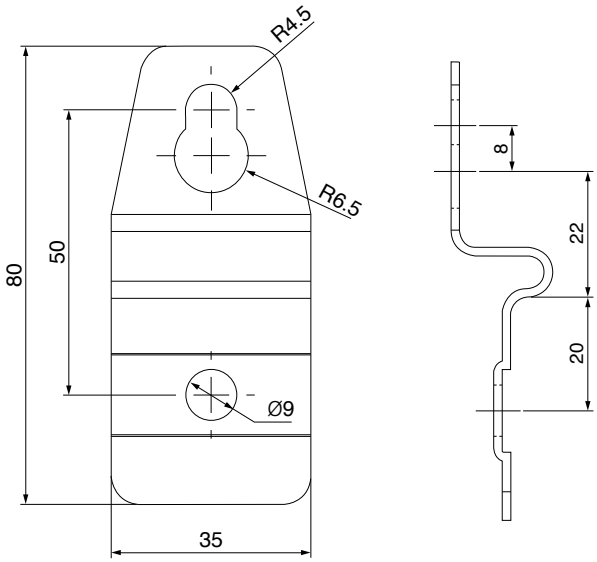

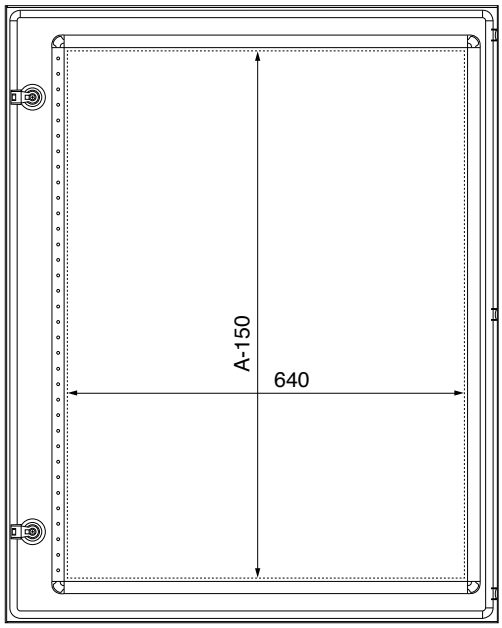

B=800

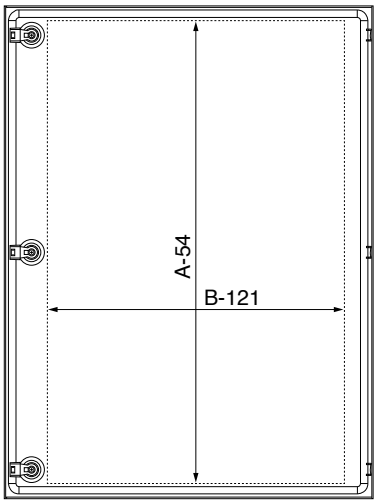

B<800

Unless otherwise specified, all dimensions are in mm.

WALL-MOUNTED ENCLOSURES

E SERIES
Distribution Boards

E-Kabin E Series
Distribution Boards

E-Kabin E Series, distribution boards are especially designed for indoor electrical installation applications of buildings such as shopping malls, hotels, hospitals etc. Their design is suitable for installation of DIN-rail type devices. With their monoblock body structure they can ensure IP 55 protection degree. The body is made of pre-galvanized steel sheet with epoxy polyester powder paint applied.

Type of Mounting	: Stand Alone & Wall-Mounted / Wall-Mounted
Modularity	: Monoblock
Application	: Indoor
Protection Class	: IP 55
Paint	: Epoxy-Polyester Powder Paint
Colour	: Standard RAL 7035 (Grey Colour)
Environmental Class	: According to EN 60721 - 3 - 3 IE32
Standards	: IEC 61439-1, IEC 62208 IEC 60529, IEC 62262

Features

In-door support rails

In-door support rails increase the strength of the door and allow attachment of equipment such as cables and cable trays.

Polyurethane sealing gasket

Foam-in place gasket applied to the door does not loose its elasticity in time and provides protection against dust and water.

Glazed door application

Tempered glass door can be selected optionally.

Deep gap between door and cover plate

100 mm gap between the door and the cover plate allows the installation of accessories such as measuring devices, signal lamps, etc. on the door.

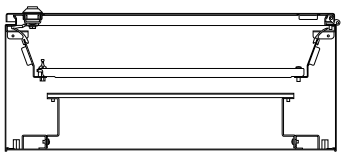

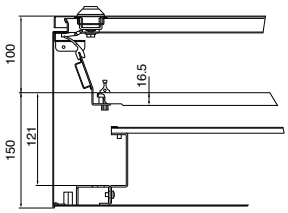

Hinged cover plates

Cover plates are manufactured as hinged and openable. Thus, it is possible to intervene without removing the cover plate.

180° Wide openable door

The door can be opened 180° wide with the standard hinge set, thus full access is provided during assembly.

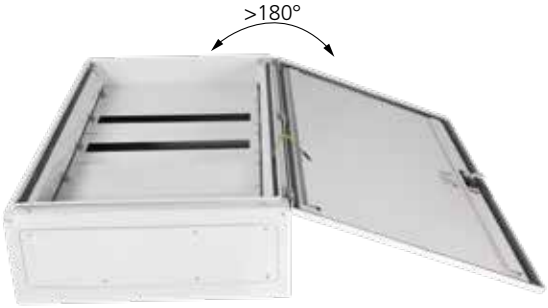

Easy planning

Thanks to the standard width, 24/35 pieces of 18 mm units width devices can be used on each row.

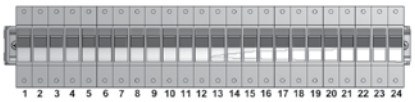

24 Units - 60 cm rated width
35 Units - 80 cm rated width

Useful bracket

With the bracket set, the enclosure can be fixed to the wall easily and quickly.

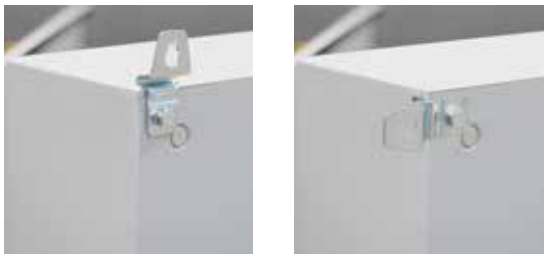

Changeable door opening direction

The door opening direction can be changed if it is needed.

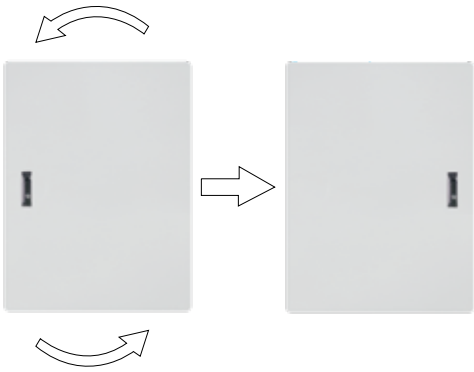

Order Codes

EE Series Wall-Mounted Enclosures

Enclosure Rated Height (A)	Enclosure Rated Width (B)	Enclosure Rated Depth (C)	Order Codes
500	600	250	EE 50 60 25 D (C)
650	600	250	EE 65 60 25 D (C)
800	600	250	EE 80 60 25 D (C)
950	600	250	EE 95 60 25 D (C)
1100	600	250	EE 110 60 25 D (C)
1250	600	250	EE 125 60 25 D (C)
800	800	250	EE 80 80 25 D (C)
950	800	250	EE 95 80 25 D (C)
1100	800	250	EE 110 80 25 D (C)
1250	800	250	EE 125 80 25 D (C)

EE Series Floor-Standing & Wall-Mounted Enclosures

Enclosure Rated Height (A)	Enclosure Rated Width (B)	Enclosure Rated Depth (C)	Order Codes
1800	600	250	EE 180 60 25 D
1800	800	250	EE 180 80 25 D
2000	600	250	EE 200 60 25 D
2000	800	250	EE 200 80 25 D

D - Blank door **C** - Glazed door

Unless otherwise specified, all dimensions are in mm.

Dimensions

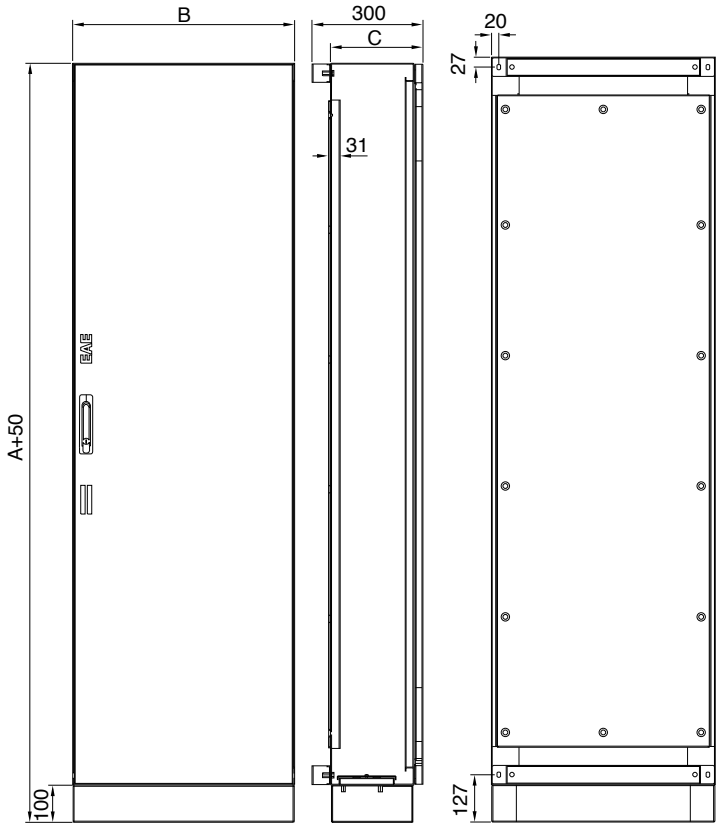

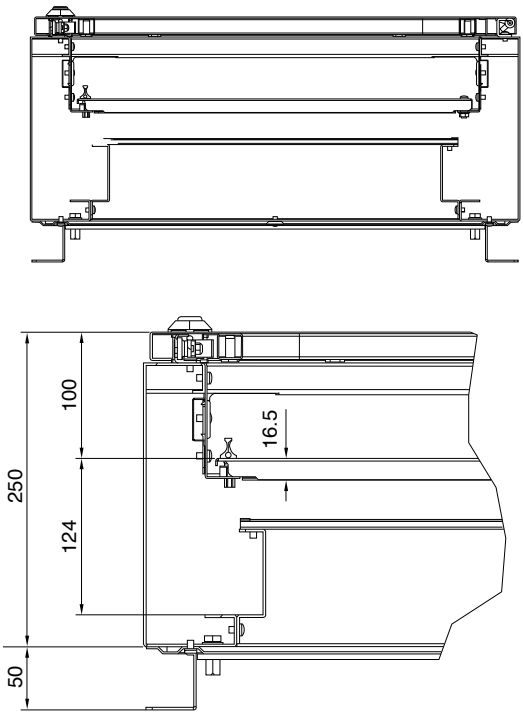

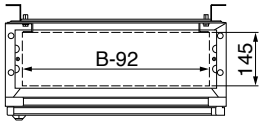

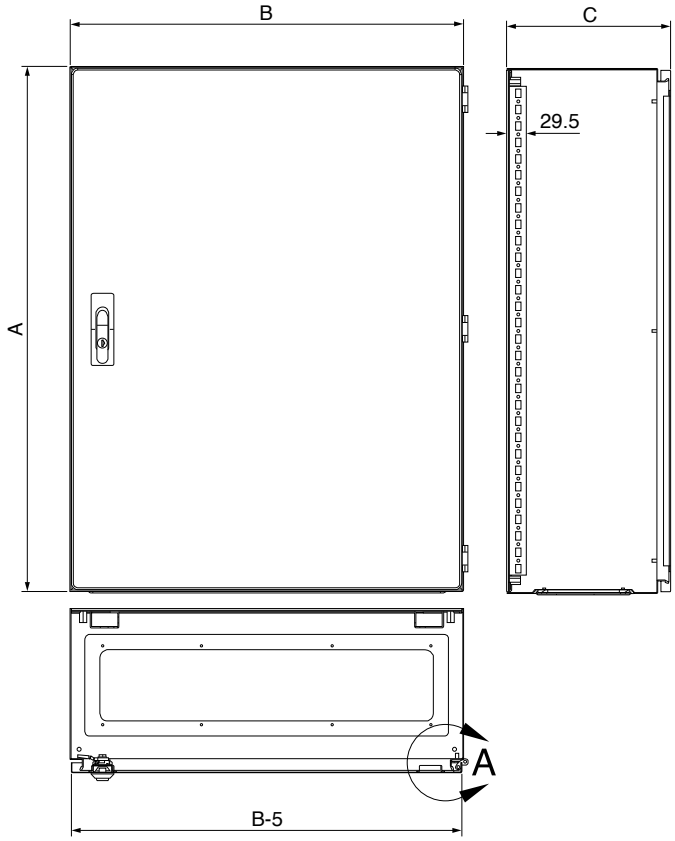

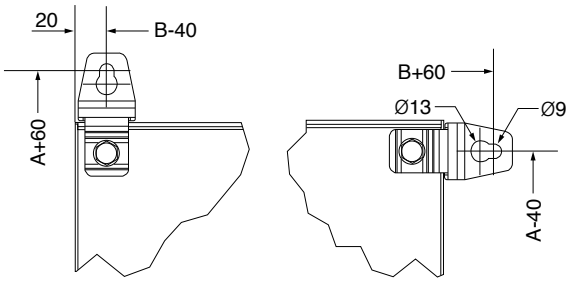

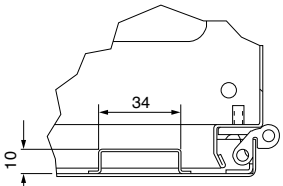

DETAIL A

Unless otherwise specified, all dimensions are in mm.

WALL-MOUNTED ENCLOSURES

WALL-MOUNTED ENCLOSURES ACCESSORIES

		Sayfa
Internal Mounting Accessories	Partial Mounting Plate - EE MP	38
	Partial Mounting Plate - EM MP	39
	Galvanized Rail Set - EE RSS	40
	Aluminum Rail Set - EE RSA	40
	Special Mounting Plate - EE TB	41
Front Cover Plates and Accessories	Full Height Cover Plate - EM OB	42
	Depth Adjustment System - EM DS	42
	Cover Plate With Hinges - EG OM	43
	Cover Plate Seal Kit - EG OMM	44
	Cover Plate Screw Connection Kit - EG OMV	44
	Cover Plate Standard Hinge Kit - EG OMT	44
Ventilation Accessories	Fan-Filter Unit - EG FAN	45
	Filter Unit - EG FIL	45
	Spare Filter - EG FS	45
	Thermostat - EG ET	46
	Fan-Filter Unit With Thermostat - EG FAT	46
Plinth and Cable Entry Accessories	Plinth Set - HM BZ	47
	Plinth Set - XM BZ	47
	Cable Attachment Rail - EE KTP	48
	Gland Plate with Brush - EG FR	48
Locks	Lock Set - EM KT	49
	Wing-Knob Lock Set - HM KT	49
	Stainless-Steel Lock Set - XM KT	49
Document Pockets	Project Document Pocket - EM SC	50
	Project Document Pocket - EE SC	50
	Project Document Pocket - EG PC	51
Other Accessories	Bracket Set - EO BS	52
	Stainless-Steel Bracket Set - XM BS	52
	Support Rail - EM KP	53
	Support Rail - EE KP	53
	180° Opening Hinge - EM TA	54
	Wall Mounting Rail - EE DM	54
	Cable Duct - EE KB	55
	Adjustable Fixing Kit - EE AYT	55
	M5x8 Self-Tapping Screw - EG CK 5	56
	Snap-on Gasket - EG GC	56

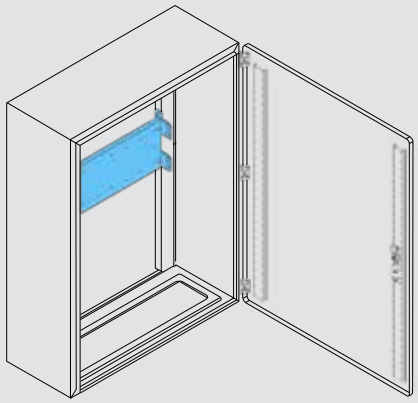

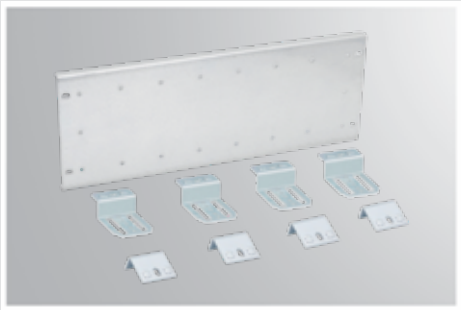

Partial Mounting Plate - EE MP

Height is adjustable. It is designed for general usage.

Material : Galvanized steel sheet
Surface : Galvanized, Not Painted
Content : 1 piece of Mounting plate
1 piece of Connection and fixing set

Applicable Series EE

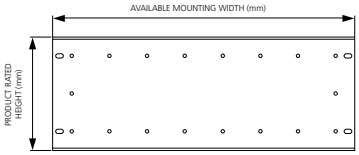

Product Rated Height	Available Product Width	Order Codes
50	600	EE MP 0560
	800	EE MP 0580
150	600	EE MP 1560
	800	EE MP 1580
200	600	EE MP 2060
	800	EE MP 2080
250	600	EE MP 2560
	800	EE MP 2580
300	600	EE MP 3060
	800	EE MP 3080
350	600	EE MP 3560
	800	EE MP 3580
400	600	EE MP 4060
	800	EE MP 4080

Unless otherwise specified, all dimensions are in mm.

Partial Mounting Plate - EM MP

It is designed for general usage.

Material : Galvanized steel sheet
Surface : Galvanized, Not Painted
Content : 1 piece of Mounting plate
1 piece of Connection and fixing set

Applicable Series EM EO HM XM

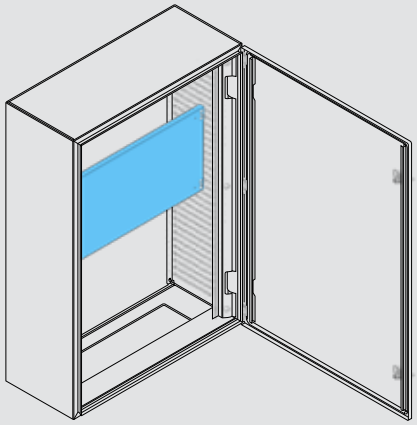

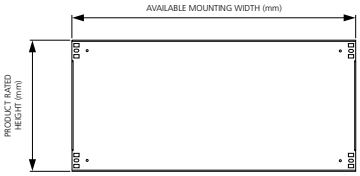

Warning: Used with EM DS

Product Rated Height	Available Product Width	Order Codes
50	300	EM MP 0530
	400	EM MP 0540
	500	EM MP 0550
	600	EM MP 0560
	800	EM MP 0580
100	300	EM MP 1030
	400	EM MP 1040
	500	EM MP 1050
	600	EM MP 1060
	800	EM MP 1080
150	300	EM MP 1530
	400	EM MP 1540
	500	EM MP 1550
	600	EM MP 1560
	800	EM MP 1580
200	400	EM MP 2040
	500	EM MP 2050
	600	EM MP 2060
	800	EM MP 2080
250	400	EM MP 2540
	500	EM MP 2550
	600	EM MP 2560
	800	EM MP 2580

Product Rated Height	Available Product Width	Order Codes
300	400	EM MP 3040
	500	EM MP 3050
	600	EM MP 3060
	800	EM MP 3080
400	400	EM MP 4040
	500	EM MP 4050
	600	EM MP 4060
	800	EM MP 4080
500	400	EM MP 5040
	500	EM MP 5050
	600	EM MP 5060
	800	EM MP 5080
600	400	EM MP 6040
	500	EM MP 6050
	600	EM MP 6060
	800	EM MP 6080

Unless otherwise specified, all dimensions are in mm.

Internal Mounting Accessories

Galvanized Rail Set - EE RSS

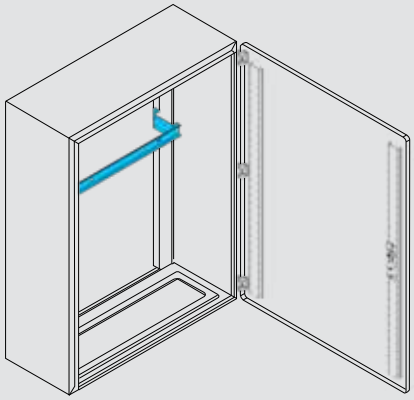

It is designed for parts that can be mounted on a DIN rail.

• Suitable for 600 wide enclosure. 24 MCBs can be used side by side.

Material : Galvanized steel sheet
Surface : Galvanized, Not Painted
Content : 1 piece of DIN MCB rail
1 piece of Fixing kit

Applicable Series EE

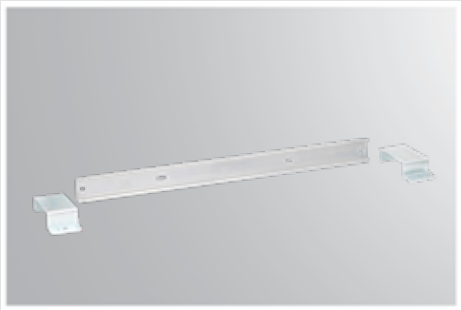

Galvanized rail set

Product Rated Width	Order Code
600	EE RSS 60

Aluminum Rail Set - EE RSA

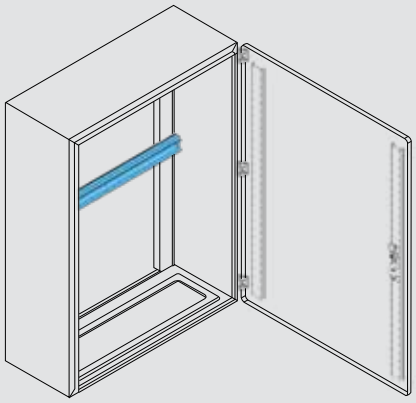

It is designed for parts that can be mounted on a DIN rail.

Material : Aluminium
Surface : -
Content : 1 piece of aluminum MCB rail
1 piece of Fixing set

Applicable Series EE

Aluminum rail kit

Product Rated Width	Order Code
600	EE RSA 60
800	EE RSA 80

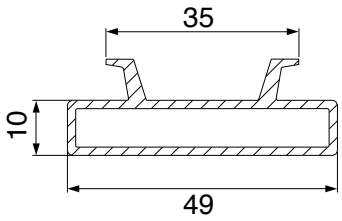

Unless otherwise specified, all dimensions are in mm.

Special Mounting Plate - EE TB

It is designed for capacitor mounting in compensation panels or in accordance with the purpose of partitioning.

Material : Pre-Galvanized steel sheet
Surface : Galvanized, Not Painted
Content : 1 piece of Carrier compartment
4 pieces of M5x8 self-tapping screw

Applicable Series EE

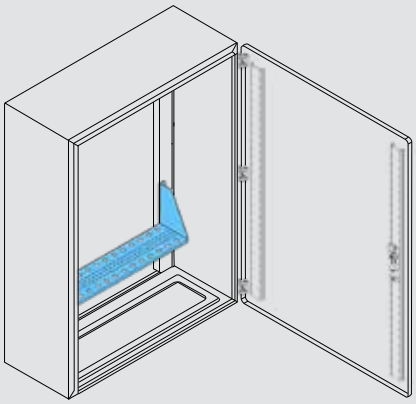

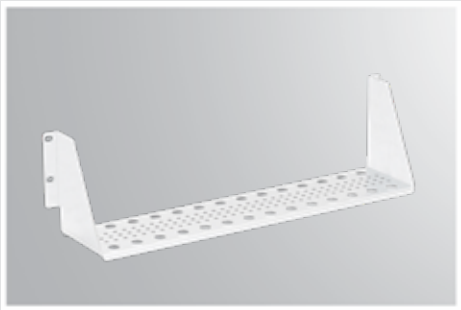

Special mounting plate

Product Rated Width	Order Code
600	EE TB 60
800	EE TB 80

Unless otherwise specified, all dimensions are in mm.

Front Cover Plates and Accessories

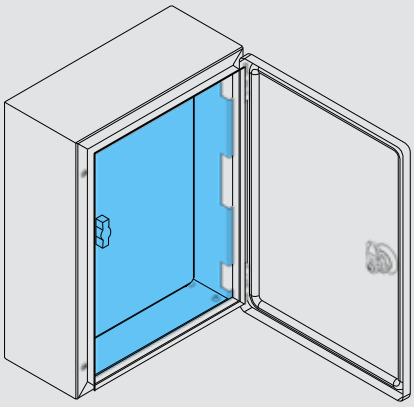

Full Height Cover Plate - EM OB

It is designed for situations when interior door application is desired.

- The full height cover plate can be opened 90 degrees in its assembled position.
- Not suitable for use with the EM DS depth adjustment system.

Material : Galvanized steel sheet
Surface : RAL 7035 (Grey Colour)
Content : 1 piece of Full height cover plate with hinge
2 pieces of Height connection rails
2 pieces of Width connection rails
1 piece of Fittings set

Applicable Series: EM EO XM HM

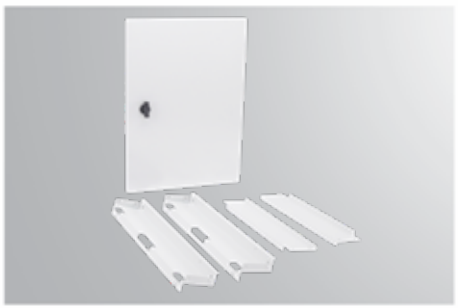

Applicable Enclosure Dimensions - HxW	Order Codes	Applicable Enclosure Dimensions - HxW	Order Codes
500x400	EM OB 50 40	900x600	EM OB 90 60
600x400	EM OB 60 40	1000x600	EM OB 100 60
600x600	EM OB 60 60	1000x700	EM OB 100 70
700x500	EM OB 70 50	1000x800	EM OB 100 80
800x600	EM OB 80 60	1200x600	EM OB 120 60
800x800	EM OB 80 80	1200x800	EM OB 120 80

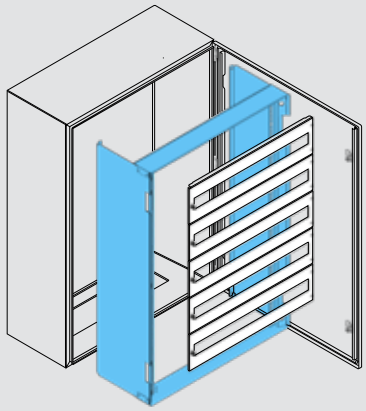

Depth Adjustment System - EM DS

It is designed for front cover plate and partial mounting plate applications.

Material : Galvanized steel sheet
Surface : Galvanized, Not Painted
Content : 2 pieces of Depth adjustment profiles
2 pieces of Width connection rails
2 pieces of Cover plate connection rails
1 piece of Fittings set

Applicable Series: EM EO XM HM

Enclosure Rated Height	Enclosure Rated Width	Enclosure Rated Depth	Order Codes
500	400	200	EM DS 50 40 20
600	400	200	EM DS 60 40 20
700	500	200	EM DS 70 50 20
700	500	300	EM DS 70 50 30
800	600	200	EM DS 80 60 20
800	600	300	EM DS 80 60 30
800	800	300	EM DS 80 80 30
1000	600	300	EM DS 100 60 30
1200	600	300	EM DS 120 60 30

Unless otherwise specified, all dimensions are in mm.

Cover Plate With Hinges - EG OM

It is designed for general use. It has a hinged structure.

Material : Galvanized steel sheet
Surface : RAL 7035 (Grey Colour)
Content : 1 piece of Cover plate
1 piece of Fittings set

Applicable Series

ES ED EL EM EO EE
HS HM XS XM HF

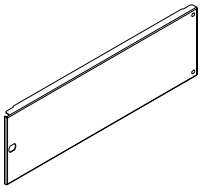

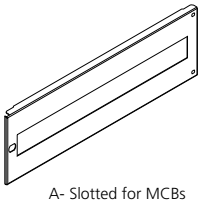

A- Slotted for MCBs

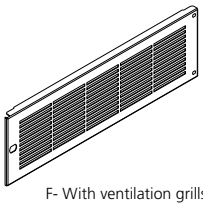

F- With ventilation grills

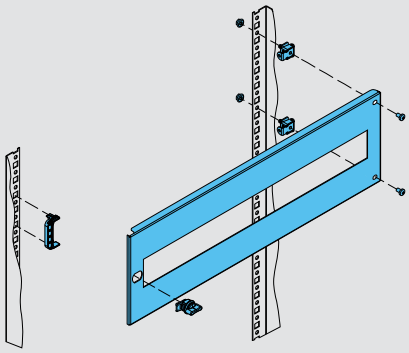

Product Rated Height	Product Width Suitable for Mounting	Order Codes
100	400	EG OM 1004
	500	EG OM 1005
	600	EG OM 1006
	700	EG OM 1007
	800	EG OM 1008
150	400	EG OM 1504 (A,F)
	500	EG OM 1505 (A,F)
	600	EG OM 1506 (A,F)
	700	EG OM 1507 (A,F)
	800	EG OM 1508 (A,F)
200	400	EG OM 2004 (A,F)
	500	EG OM 2005 (A,F)
	600	EG OM 2006 (A,F)
	700	EG OM 2007 (A,F)
	800	EG OM 2008 (A,F)
250	400	EG OM 2504
	500	EG OM 2505
	600	EG OM 2506
	700	EG OM 2507
	800	EG OM 2508
300	400	EG OM 3004
	500	EG OM 3005
	600	EG OM 3006
	700	EG OM 3007
	800	EG OM 3008
350	400	EG OM 3504
	500	EG OM 3505
	600	EG OM 3506
	700	EG OM 3507
	800	EG OM 3508

Product Rated Height	Product Width Suitable for Mounting	Order Codes
450	400	EG OM 4504
	500	EG OM 4505
	600	EG OM 4506
	700	EG OM 4507
	800	EG OM 4508
500	400	EG OM 5004
	500	EG OM 5005
	600	EG OM 5006
	700	EG OM 5007
	800	EG OM 5008
550	400	EG OM 5504
	500	EG OM 5505
	600	EG OM 5506
	700	EG OM 5507
	800	EG OM 5508
650	400	EG OM 6504
	500	EG OM 6505
	600	EG OM 6506
	700	EG OM 6507
	800	EG OM 6508
750	400	EG OM 7504
	500	EG OM 7505
	600	EG OM 7506
	700	EG OM 7507
	800	EG OM 7508

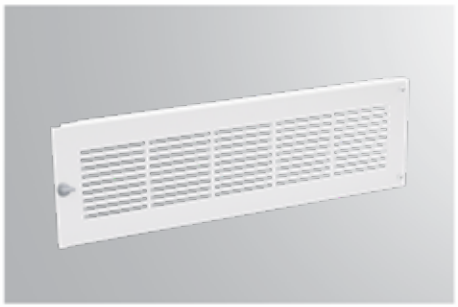

Unless otherwise specified, all dimensions are in mm.

Front Cover Plates and Accessories

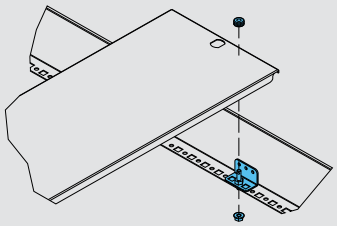

Cover Plate Seal Kit - EG OMM

It is designed for sealing cover plates.

Material	:	Steel sheet
Surface	:	Galvanized coating
Content	:	1 piece of Fixing part 1 piece of Fittings pack
Applicable Series	:	Used with EG OM.

Cover plate seal kit

Order Code	EG OMM

Note: An additional hole must be drilled on the cover plate for the seal fixing to be used.

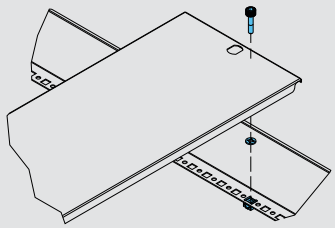

Cover Plate Screw Connection Kit - EG OMV

It is designed to be used when the screw connection is required for cover plates connections.

Content	:	10 pieces of M6 special bolts 10 pieces of M6 cage nuts 10 pieces of Plastic safety washers
Applicable Series	:	Used with EG OM.

Cover plate screw connection kit

Order Code	EG OMV

Note: An additional hole must be drilled on the cover plate for the screw fixing to be used.

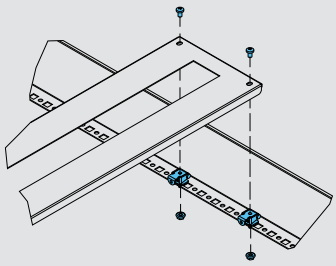

Cover Plate Standard Hinge Kit - EG OMT

It is included in standard supply content.

Material	:	Steel sheet
Surface	:	Galvanized coating
Content	:	2 pieces of Hinge 1 piece of Fittings pack
Applicable Series	:	Used with EG OM.

Cover plate standard hinge kit

Order Code	EG OMT

Fan-Filter Unit - EG FAN

It is designed for cooling when the ambient temperature is lower than the interior temperature of the enclosure.

- Quick and easy assembly without tools
- Quick and easy filter change from outside
- IP44 protection class

Material : Plastic
Surface : RAL 7035 (Grey Colour)
Content : 1 piece of plastic filtered fan

Applicable Series: EM EO EE HM XM EL ES ED XS EK

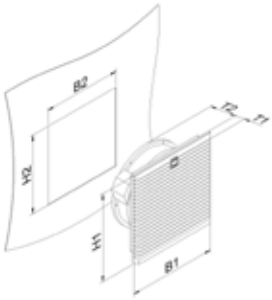

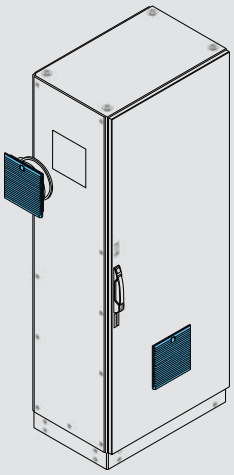

Fan-filter unit

Order Code	Product Dimension	Voltage V	Frequency Hz	Flow A	Power W	Noise Level dBA	Fan Flow m³/h
EG FAN 12	150x150	220/240	50/60	0,14	21	48	82
EG FAN 25	250x250	220/240	50/60	0,22	38	59	300

Roller bearing motors are used in fan.

Fan-filter unit

Order Code	B1 x H1 mm	B2 x H2 mm	T1 mm	T2 mm
EG FIL-FAN 12	150x150	123x123	13	67
EG FIL-FAN 25	250x250	223x223	13	115

Filter Unit - EG FIL

It is designed for cooling when the ambient temperature is lower than the interior temperature of the enclosure.

- Quick and easy assembly without tools
- Quick and easy filter change from outside
- IP44 protection class

Material : Plastic
Surface : RAL 7035 (Grey Colour)
Content : 1 piece of plastic filtered louvre
Applicable Series: EM EO EE HM XM EL ES ED XS EK

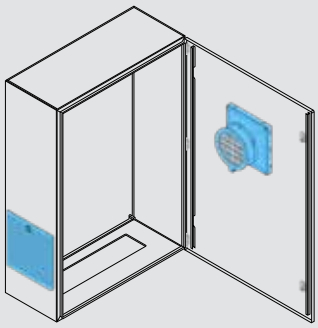

Filter unit

Product Dimension	Protection Class	Order code
150x150	IP44	EG FIL 12 44
250x250	IP44	EG FIL 25 44

Spare Filter - EG FS

It is designed to be used as a spare in filtered louvres.

- 5 pcs filter foam, • Washable, • G2 class

Spare Filter (IP44)

Product Dimension	Order code
125x125	EG FS 12 44
250x250	EG FS 25 44

Unless otherwise specified, all dimensions are in mm.

Thermostat - EG ET

It is used to control the fans that can be operated in case the temperature inside the enclosure increases.

- 0-60 °C temperature setting range
- Quick and easy mounting feature, suitable for 35 mm DIN rail

Material : ABS UL94 V0 Flame retardant
Content : 1 piece of Thermostat

Applicable Series: EM EO EE HM XM EL ES ED XS EK

Thermostat	
Order Code	EG ET 01

Fan-Filter Unit With Thermostat - EG FAT

It is designed for cooling when the ambient temperature is lower than the interior temperature of the enclosure.

- 0-60 °C temperature setting range
- Integrated ON/OFF switch.

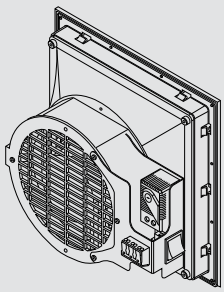

Material : Plastic
Content : 1 piece of Filtered fan with thermostat

Applicable Series: EM EO EE HM XM EL ES ED XS EK

Fan-filter unit with thermostat	
Order Code	EG FAT 25

Note: For fan and filter details, please check product pages with EG FAN and EG FIL codes.

Unless otherwise specified, all dimensions are in mm.

Plinth and Cable Entry Accessories

Plinth Set - HM BZ

It is designed to connect the enclosure to the ground and to arrange the cable entry-exit.

Material : Galvanized steel sheet
Surface : Ral 9005 (Black Colour)
Content : 2 pieces of Width plinth trim panels
2 pieces of Depth plinth trim panels
4 pieces of M8x20 hex screw
M6x20 allen bolt

Applicable Series: EM EO HM

Plinth Set

Enclosure Rated Width	Enclosure Rated Depth	Order Code	Enclosure Rated Width	Enclosure Rated Depth	Order Code
300	150	HM BZ 30 15	600	250	HM BZ 60 25
300	200	HM BZ 30 20	600	300	HM BZ 60 30
350	150	HM BZ 35 15	700	300	HM BZ 70 30
400	150	HM BZ 40 15	800	300	HM BZ 80 30
400	200	HM BZ 40 20	800	400	HM BZ 80 40
500	200	HM BZ 50 20	1000	300	HM BZ 100 30
500	300	HM BZ 50 30	1000	400	HM BZ 100 40
600	200	HM BZ 60 20	1200	300	HM BZ 120 30

Note: Installation shall be done by the customer by drilling the bottom part of the enclosure.

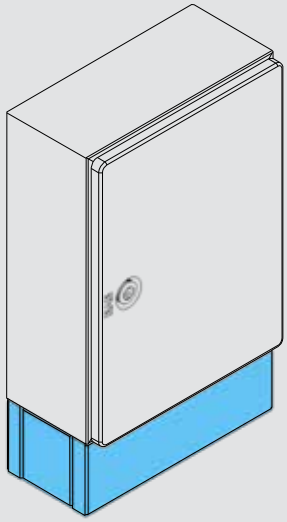

Plinth Set - XM BZ

It is designed to connect the enclosure to the ground and to arrange the cable entry-exit.

Material : AISI 304 grade stainless-steel
Surface : -
Content : 2 Width plinth trim panels
2 pieces of Depth plinth trim panels
4 pieces of M8x20 Stainless hex screw
M6x20 Stainless allen bolt

Applicable Series: XM

Plinth Set

Enclosure Rated Width	Enclosure Rated Depth	Order Code
300	200	XM BZ 30 20
400	200	XM BZ 40 20
500	200	XM BZ 50 20
500	300	XM BZ 50 30
600	200	XM BZ 60 20
600	300	XM BZ 60 30
800	200	XM BZ 80 20
800	300	XM BZ 80 30

Note: Installation shall be done by the customer by drilling the bottom part of the enclosure.

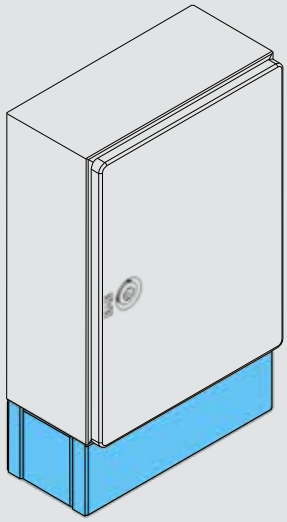

Unless otherwise specified, all dimensions are in mm.

Plinth and Cable Entry Accessories

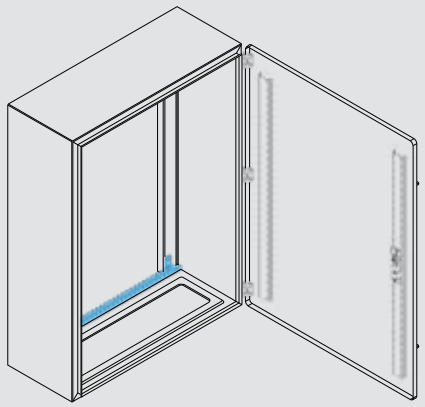

Cable Attachment Rail - EE KTP

It is designed to fix the panel incomming cables.

Material : Galvanized steel sheet
Surface : Galvanized, Not Painted
Content : 1 piece of Cable attachment rail
2 pieces of M5x8 self-tapping screw

Applicable Series: EE

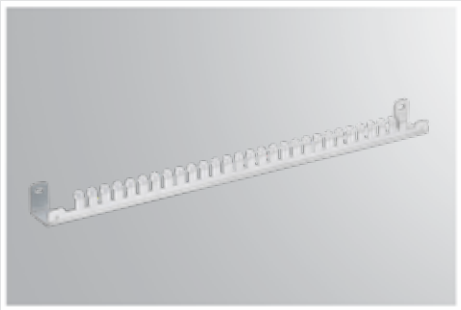

Cable Attachment Rail

Enclosure Rated Width	Order Code
600	EE KTP 60
800	EE KTP 80

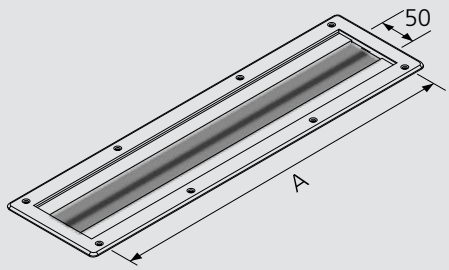

Gland Plate With Brush - EG FR

It is used for multiple cable transits from the cable entry plates of the panels.

Material : Galvanized steel sheet
Surface : Black colour
Content : 1 piece of Gland plate
2 pieces of PVC brushes
1 piece of Fittings pack

Applicable Series: EM EO EE EL

Gland plate with brush

Gland Plate Rated Dimension	Size A	Order Code
400	300	EG FR 40
600	500	EG FR 60

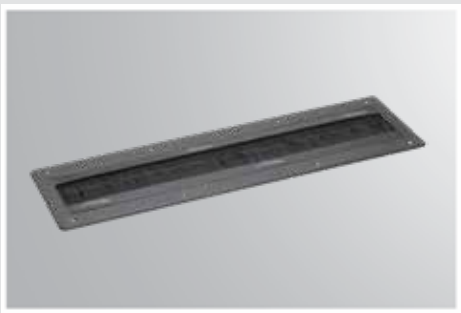

Note: In case of using a gland plate with brush, the IP protection level of the enclosure will decrease to IP 00.

Unless otherwise specified, all dimensions are in mm.

Locks

Lock Set - EM KT

It is suitable for the lock recess on the door.

Material : Plastic, Zamak
Surface : Black colour
Content : 1 piece of Lock

Applicable Series: EM EO

Plastic, keyless wing-knob lock

Order Code
EM KT 09

Encrypted, keyed Zamak lock

Order Code
EM KT 12 (Eurokey 333)

Padlock type Zamak lock

Order Code
EM KT 13

Wing-Knob Lock Set - HM KT

It is suitable for the lock recess on the door.

Material : Zamak
Surface : Black colour
Content : 1 piece of Black colour wing-knob lock (Eurokey 333)

Applicable Series: HM

Wing-knob lock set

Order Code	HM KT

Stainless-Steel Lock Set - XM KT

In stainless-steel enclosures, It is suitable for the lock recess on the door.

Material : Stainless-steel
Content : 1 piece of ø3 mm Double bit lock

Applicable Series: XM

Stainless-Steel lock

Stainless-Steel Grade	Order Code
304	XM KT 12
316	XM KT 13

Unless otherwise specified, all dimensions are in mm.

Document Pockets

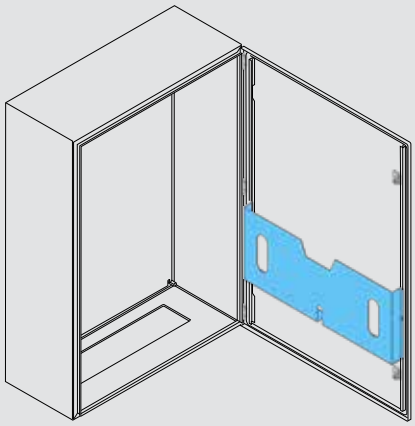

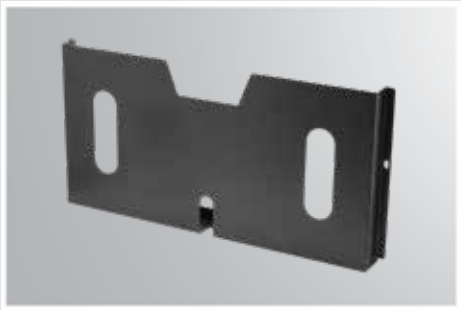

Project Document Pocket - EM SC

It is designed to store drawings.

Material : Galvanized steel sheet
Surface : Ral 9005 Black colour
Content : 1 piece of Sheet metal document pocket
2 pieces of 3.9x13 sheet metal screws

Applicable Series EM EO

Project document pocket

Enclosure Rated Width	Order Code
400	EM SC 40
500	EM SC 50
600	EM SC 60
700	EM SC 70
800	EM SC 80

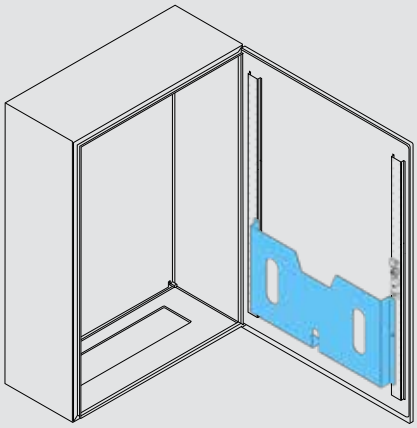

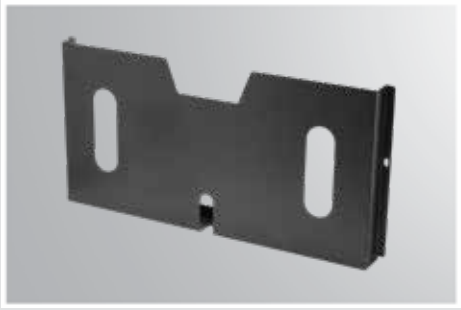

Project Document Pocket - EE SC

It is designed to store drawings.

Material : Galvanized steel sheet
Surface : Ral 9005 black colour
Content : 1 piece of Pre-galvanized steel sheet document pocket.
2 pieces of 3.9x13 sheet metal screws

Applicable Series EE

Project document pocket

Enclosure Rated Width	Order Code
600	EE SC 60
800	EE SC 80

Unless otherwise specified, all dimensions are in mm.

Project Document Pocket - EG PC

It has the feature of sticking with self-adhesive double-sided tape suitable for A4 paper size. It can be fixed with bolts if desired.

Material	: Plastic
Surface	: Black colour
Content	: 1 piece of Plastic document pocket

Applicable Series

ES ED EM EO EE
EK HS HM XS XM

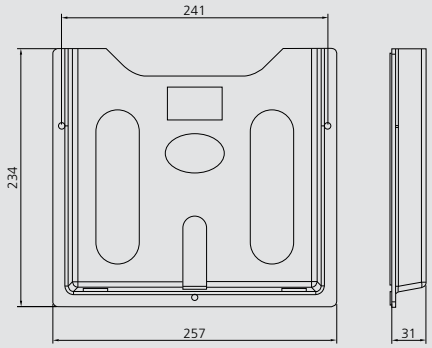

Project document pocket

Order Code	EG PC

Unless otherwise specified, all dimensions are in mm.

Other Accessories

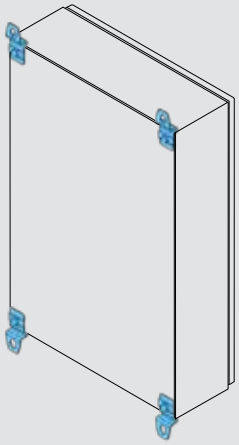

Bracket Set - EO BS

It is designed for easy and quick mounting of the enclosure to the wall.

Material : Steel sheet
Surface : Electro galvanized coating
Content : 4 pieces of Bracket Pieces
4 pieces of M8x20 hex head screw
4 pieces of M8 Washers
4 pieces of Sealing gaskets

Applicable Series: EM EO ET

Bracket set

Order Code	EO BS

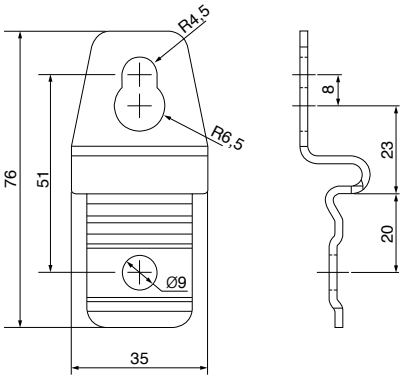

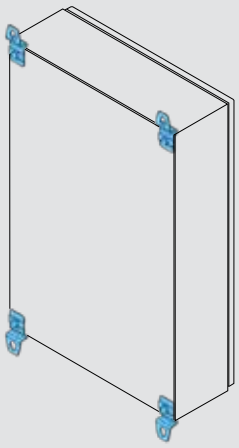

Stainless-Steel Bracket Set - XM BS

It is designed to mount the enclosure on the wall easily and quickly.

Material : AISI 316 grade stainless-steel
Surface : Electro polishing
Content : 4 pieces of stainless brackets
4 pieces of M8x20 Stainless hex head screw
4 pieces of M8 Stainless washer
4 pieces of Sealing gaskets

Applicable Series: XM HM XT

Stainless-Steel bracket set

Order Code	XM BS

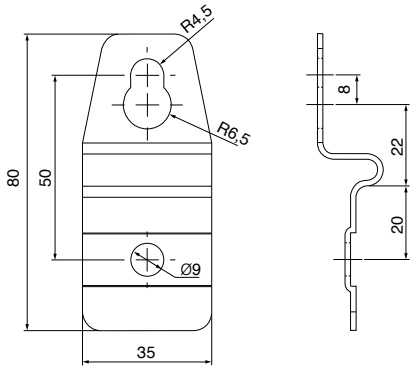

Unless otherwise specified, all dimensions are in mm.

Support Rail - EM KP

It is designed to organize the cables inside the door. It is selected according to the door width.

Material : Galvanized steel sheet
Surface : Galvanized, Not Painted
Content : 1 piece of Support rail
2 pieces of 3.9x13 sheet metal screws

Applicable Series EM EO

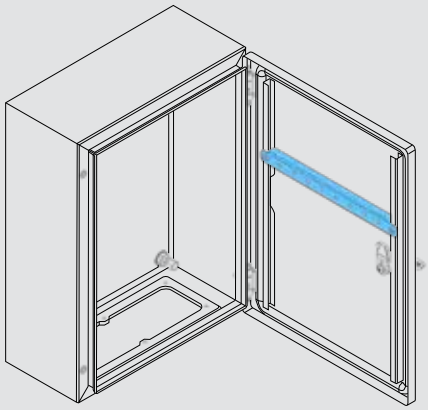

Support rail

Enclosure Rated Width	Order Code
300	EM KP 30
350	EM KP 35
400	EM KP 40
500	EM KP 50
600	EM KP 60
700	EM KP 70
800	EM KP 80

Support Rail - EE KP

It is designed to organize the cables inside the door. It is selected according to the door width.

Material : Galvanized steel sheet
Surface : Galvanized, Not Painted
Content : 1 piece of Support rail
2 pieces of 3.9x13 sheet metal screws

Applicable Series EE

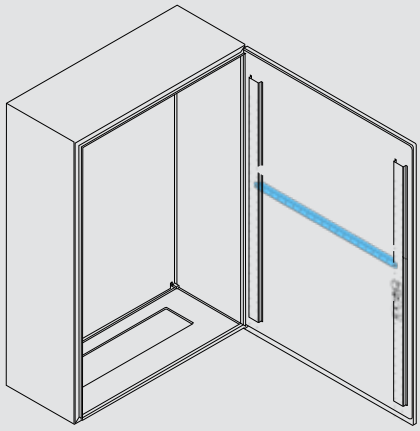

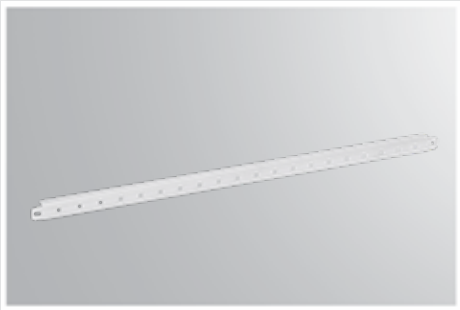

Support rail

Enclosure Rated Width	Order code
600	EE KP 60
800	EE KP 80

Unless otherwise specified, all dimensions are in mm.

Other Accessories

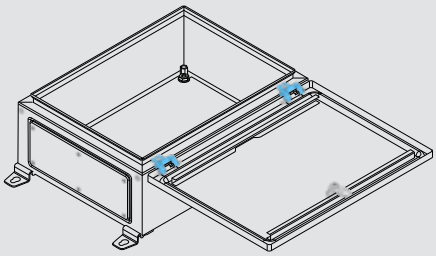

180º Opening Hinge - EM TA

It is designed to be used when the door needs to be opened 180 degrees.

Material : Zamak
Content : EM TA 180° hinge

Applicable Series EM EO

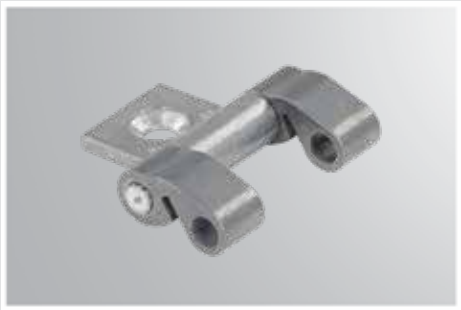

180º opening hinge

Enclosure Rated Height	Number of Hinge	Order Code
<700	2	EM TA 2M
≥700	3	EM TA 3M

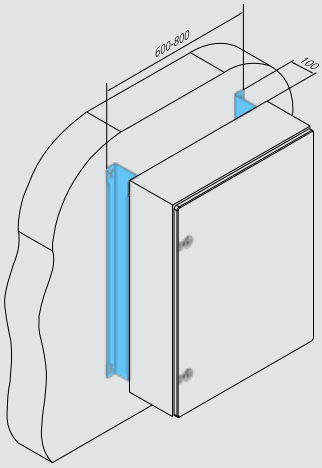

Wall Mounting Rail - EE DM

It allows cables to be carried to the upper part with the cable tray in case of cable entry-exit from the bottom of the product.

Material : Galvanized steel sheet
Surface : Painted, RAL 7035 (Grey Colour)
Conrtent : 2 pieces of Wall mounting rails
4 pieces of M8x20 hex head screw
4 pieces of M8 Washers

Applicable Series EE

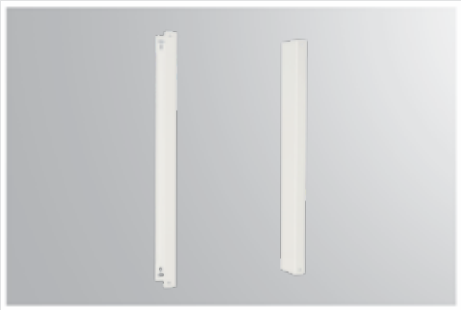

Wall mounting profile

Enclosure Rated Height	Order Code
500	EE DM 050
650	EE DM 065
800	EE DM 080
950	EE DM 095
1100	EE DM 110
1250	EE DM 125

Cable Duct - EE KB

It is designed for the visual arrangement of the cable outgoing area.

Material : Galvanized steel sheet
Surface : RAL 7035 (Grey Colour)
Content : 1 piece of Cable duct
4 pieces of M6x15 hex head screw
4 pieces of M6 Special-skirt nut
4 pieces of M6 Washers

Applicable Series EE

Cable duct

Enclosure Rated Width	Order Code
600	EE KB 060
800	EE KB 080

Note: Installation is done by the customer by drilling the enclosure.

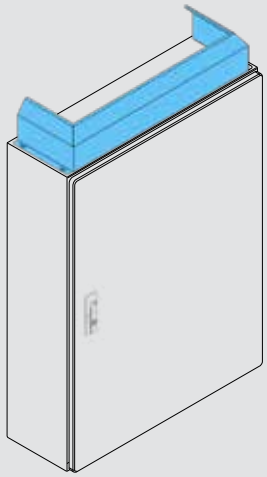

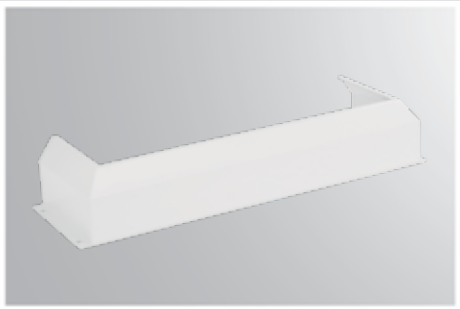

Adjustable Fixing Kit - EE AYT

It is designed for independently adjusting the height on the mounting plate when required.

Material : Galvanized steel sheet
Content : 2 pieces of EG AYT Lower fixings
2 pieces of EG AYT Upper fixings
8 pieces of M5x8 Self-tapping screw

Applicable Series EE

Adjustable fixing kit

Order Code	EE AYT

Note: Height adjustment can be made in 5 mm steps between 45 mm and 70 mm.

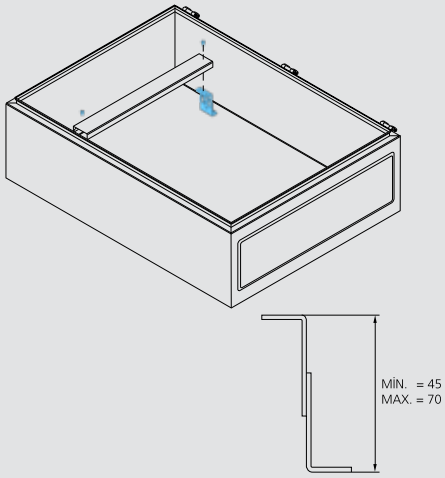

Other Accessories

M5x8 Self-Tapping Screw - EG CK 5

Special spiral metric thread structure. It has self-tapping feature for sheet metal surface.

Material : Steel
Surface : Galvanized coating
Content : 100 pieces of M5x8 self-tapping screw

Applicable Series

ES ED EL EM EO EE ET
EK HS HM XS XM XT

M5x8 self-tapping screw

Order Code	EG CK 5

Snap-On Gasket - EG GC

It is designed to prevent damages from sharp surfaces.

- Can be used by cutting to desired size
- It has a clawed structure that provides ease of assembly.

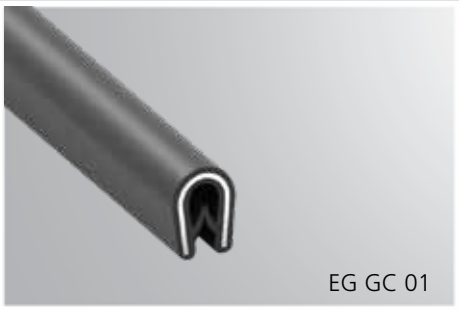

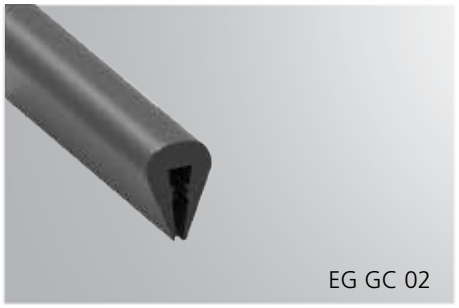

Material : PVC
Surface : Black colour
Content : Shown as in the table below.

Applicable Series

ES ED EL EM EO EE ET
EK HS HM XS XM XT

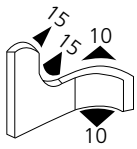

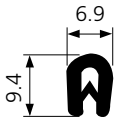

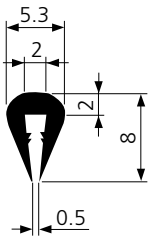

Snap-on gasket

Content	Sheet Range	Wire-Reinforced	Order Code
3 meters	1.0 - 2.0 mm	Yes	EG GC 01
4 meters	0.8 - 1.5 mm	No	EG GC 02

TERMINAL BOXES

T SERIES

E-Kabin T Series
Terminal Boxes

E-Kabin T Series terminal boxes are designed as general purpose electrical equipment enclosures for indoor applications. They have monoblock body structure and provide IP66 protection degree. The body and door are made of pre-galvanized sheet steel and painted with epoxy polyester powder coating.

Type of Mounting	: Wall-Mounted
Modularity	: Monoblock
Application	: Indoor
Protection Class	: IP 66
Paint	: Epoxy - polyester powder paint
Colour	: Standard RAL 7035 (Grey Colour)
Environmental Class	: According to EN 60721 - 3 - 3 IE32
Standards	: IEC 62208, IEC 60529, IEC 62262

Features

Quarter-turn lock

With the quarter-turn lock, the door can be opened and closed easily.

Polyurethane sealing gasket

Foam-in place gasket applied to the door does not lose its elasticity in time and provides protection against dust and water.

Possibility of custom-made cut-outs

For high quantity orders, custom-made cut-out processing on door and body is applicable.

* For details, you can get information from your customer representative.

Wide access to box

The design of the box opening prevents installation space losses and provides ease of access and installation inside the box.

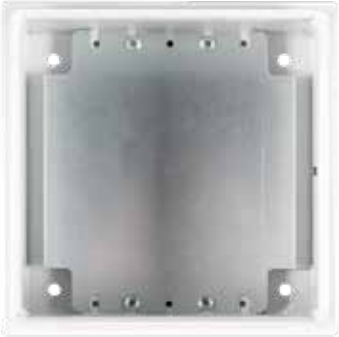

Practical mounting plate

Design of the mounting plate allows to evaluate the usable space inside the box with minimum loss.

Useful bracket accessory

With the bracket set, the box can be mounted to the wall easily and quickly. By turning the bracket 90°, mounting flexibility is provided. The bracket set, which is not included in the standard box, must be ordered separately when requested.

Order Codes

Enclosure Rated Height (B)	Enclosure Rated Width (A)	Enclosure Rated Depth (C)	Order Codes
200	200	120	ET 20 20
200	300	120	ET 20 30
200	400	120	ET 20 40
300	300	120	ET 30 30
300	400	120	ET 30 40
400	400	120	ET 40 40

Note: The mounting plate is included in the order content; bracket set is excluded.

Dimensions

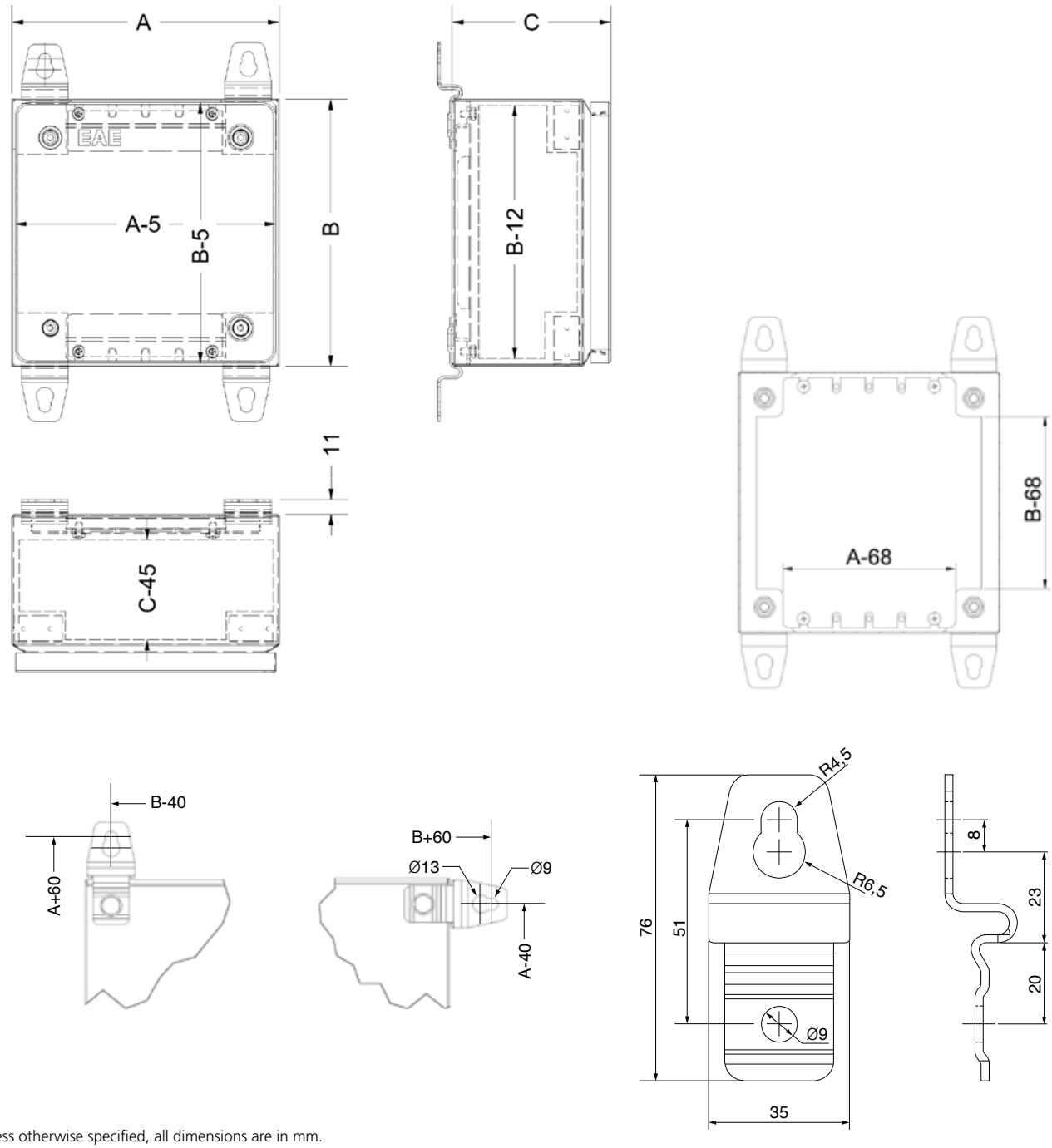

Unless otherwise specified, all dimensions are in mm.

Accessories

Bracket Set - EO BS

It allows the box to be mounted on the wall easily and quickly.

Material	:	Steel sheet
Surface	:	Electro galvanized coating
Content	:	4 pieces of Bracket pieces 4 pieces of M8x20 hex head bolt 4 pieces of M8 washers 4 pieces of Sealing gaskets
Applicable Series		EM EO ET

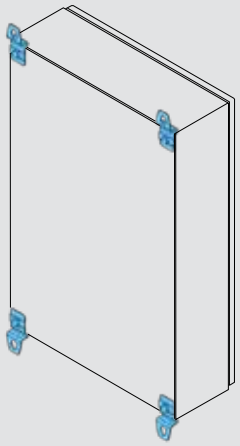

Bracket set

Order Code	EO BS

TERMINAL BOXES

XT SERIES
Stainless-Steel

E-Kabin XT Series
Stainless-Steel Terminal Boxes

E-Kabin XT Series terminal boxes are designed as general purpose electrical equipment enclosures for indoor and outdoor applications. They have monoblock body structure and provide IP66 protection degree. Standard production does not include painting process. However, custom-made production, varnished or painted in the desired RAL code is possible.

XT series stainless-steel terminal boxes can be produced with AISI 304 or 316 grade raw materials as standard. While keeping standard product design unchanged, size modification, material thickness modification and cut-outs can be applied if requested.

Type of Mounting	: Wall-Mounted
Modularity	: Monoblock
Application	: Indoor
Protection Class	: IP 66
Environmental Class	: According to EN 60721 - 3 - 3 IE33
Standards	: IEC 62208, IEC 60529, IEC 62262
Material	: AISI 304 or 316 grade stainless-steel - standard

Features

Quarter-turn lock

With quarter-turn locks, the door can be opened and closed easily.

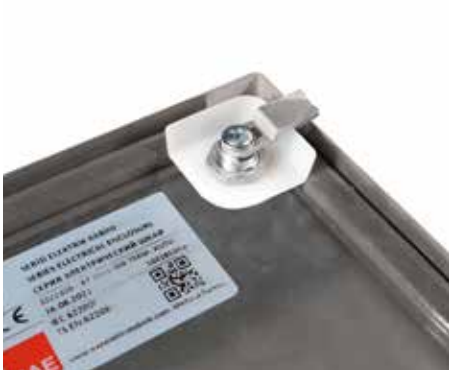

Clean surface pattern

In the production of stainless-steel enclosures, the welding process is applied in a way that does not leave any traces. Thus, clean and smooth surface appearance has been provided for welded surfaces.

Wide access opening

The design of the box opening prevents installation space losses and provides ease of access and installation inside the box.

Polyurethane sealing gasket

Foam-in place gasket applied to the door does not lose its elasticity in time and provides protection against dust and water.

Practical mounting plate

Design of the mounting plate allows to evaluate the usable space inside the box with minimum loss.

Possibility of custom-made size production for high quantity orders

For high quantity orders, non-standard, custom-made size manufacturing is possible.

* For details, you can get information from your customer representative.

Possibility of custom-made cut-outs

Custom-made cut-out processing in the door and body is applicable.

Optional stainless-steel bracket

With bracket set enclosure mounting on the wall can be done easily and quickly. Thanks to 90° swivel feature of the bracket, it's positioning can be chosen either horizontally or vertically. Bracket set is not included in standard supply content, it should be ordered separately.

Order Codes

Board Rated Height (B)	Board Rated Width (A)	Board Rated Depth (C)	Order Codes (304)	Order Codes (304)	Order Codes (316)
200	200	120	XT 20 20-304 KK	XT 20 20-304 PK	XT 20 20-316 PK
200	300	120	XT 20 30-304 KK	XT 20 30-304 PK	XT 20 30-316 PK
200	400	120	XT 20 40-304 KK	XT 20 40-304 PK	XT 20 40-316 PK
300	300	120	XT 30 30-304 KK	XT 30 30-304 PK	XT 30 30-316 PK
300	400	120	XT 30 40-304 KK	XT 30 40-304 PK	XT 30 40-316 PK
400	400	120	XT 40 40-304 KK	XT 40 40-304 PK	XT 40 40-316 PK

KK - Chrome plated zamak lock **PK -** AISI 316 grade stainless-steel lock

Note: The mounting plate is included in the order; bracket set is excluded.

Dimensions

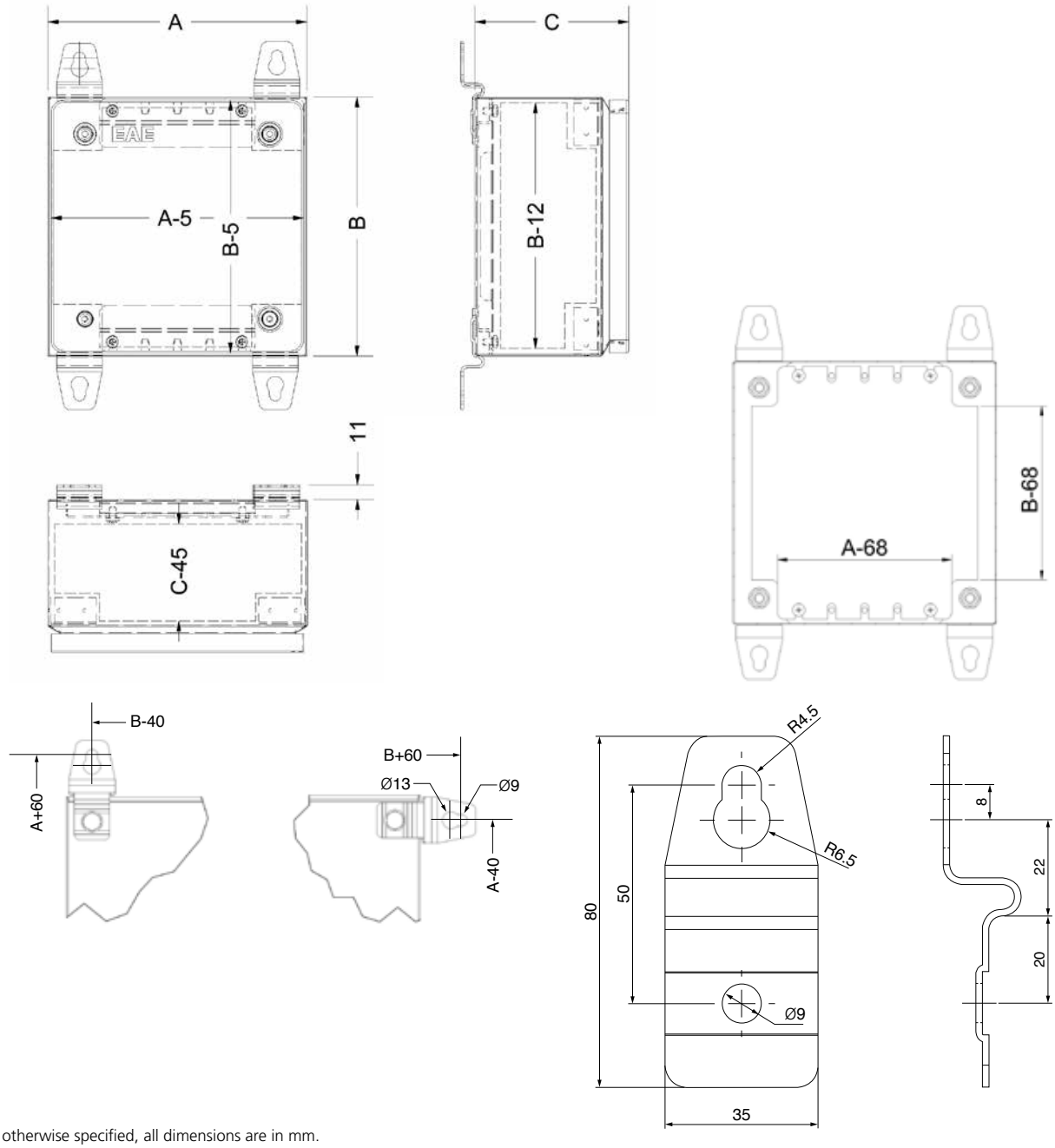

Unless otherwise specified, all dimensions are in mm.

Stainless-Steel Bracket Set - XM BS

It allows the box to be mounted on the wall easily and quickly.

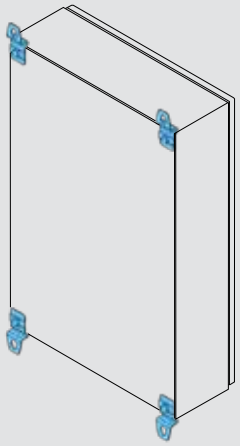

Material	: AISI 316 grade stainless-steel
Surface	: Electro polishing
Content	: 4 pieces of Stainless-steel brackets 4 pieces of M8x20 Stainless-steel hex head bolt 4 pieces of M8 Stainless washer 4 pieces of Sealing gaskets
Applicable Series	XM HM XT

Stainless bracket kit

Order Code	XM BS

CONSOLES

K SERIES and Accessories

E-Kabin K Series
Monoblock Console

E-Kabin K Series monoblock consoles are designed as general purpose electrical equipment enclosures for indoor applications. They have monoblock body structure and provide IP55 protection degree. The body and door are made of pre-galvanized sheet steel and painted with epoxy polyester powder coating.

Type of Mounting	: Floor-standing
Modularity	: Monoblock
Application	: Indoor
Protection Class	: IP 55
Paint	: Epoxy - polyester powder paint
Colour	: Standard RAL 7035 (Grey Colour)
Environmental Class	: According to EN 60721 - 3 - 3 IE32
Standards	: IEC 61439-1, IEC 62208 IEC 60529, IEC 62262

Features

Accessible from back

Thanks to hinged rear cover convenient installation is provided.

Possibility of assembly at sides

Locations of mounting rails allows maximum use of side assembly surfaces.

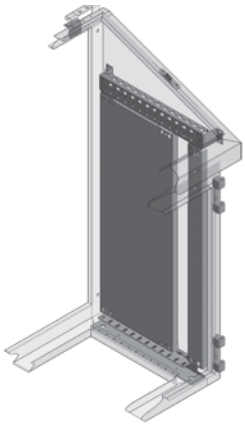

In-door support rails

In door support rails increase the strength of the door and allow of equipment such as cables and cable trays.

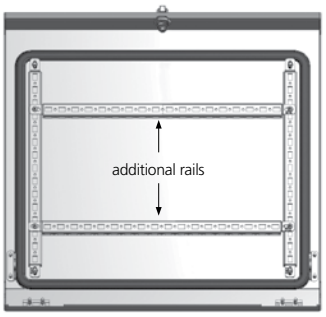

In standard supply content there are two in-door support rails included.

Polyurethane sealing gasket

Foam-in place gasket applied to the door does not lose its elasticity in time and provides protection against dust and water.

Back-to-back, double mounting plate possibility

Using of second mounting plate at rear is possible.
The second mounting plate must be ordered separately as an accessory.

Depth adjustment of mounting plate

Mounting plate can be adjusted along depth thanks to side mounting rails.

Top cover with gas spring

Gas springs at both sides enable top cover to be opened or closed and kept in open position safely. They are included in standard supply content.

Modular bottom plate arrangement

Bottom plate arrangement complying with high protection degree provides comfort with possibility of sliding piecess. Bottom plates can be equipped with different brushes which can be supplied as accessories.

Brush should be ordered separately

Order Codes

Console Rated Width (B)	Order Codes
600	EK 0604
800	EK 0804
1000	EK 1004
1200	EK 1204

Note: Mounting plate is included in the standard supply content.

Dimensions

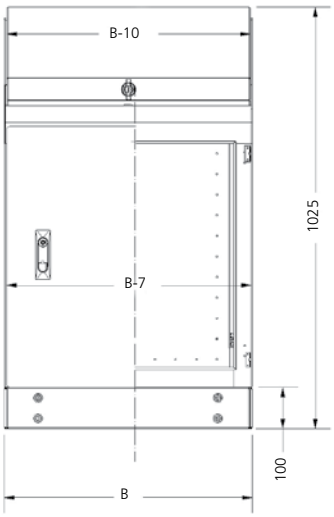

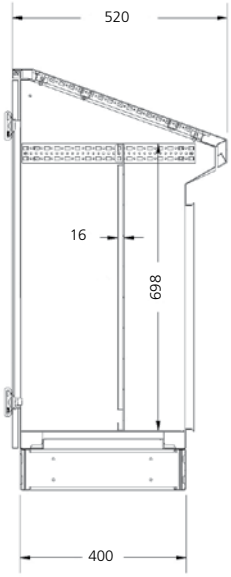

Front cover

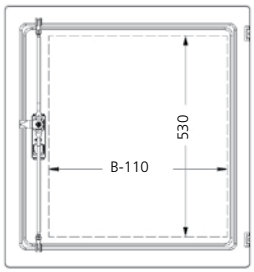

Top cover

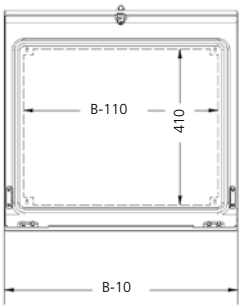

B= Width

Overlapping Front Cover

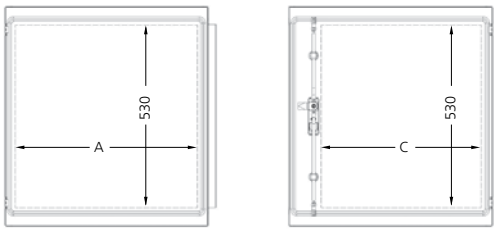

Overlapping front cover

Console Rated Width (B)	Overlapping Cover (A)	Overlapping Cover (C)
1000	435	390
1200	535	490

Unless otherwise specified, all dimensions are in mm.

Accessories

Mounting Plate - EK MK

The second mounting plate can be selected according to the console width, if desired.

Material : Galvanized steel sheet
Surface : Galvanized, Not Painted
Content : 1 piece of Mounting plate
1 piece of Fittings pack

Applicable Series: EK

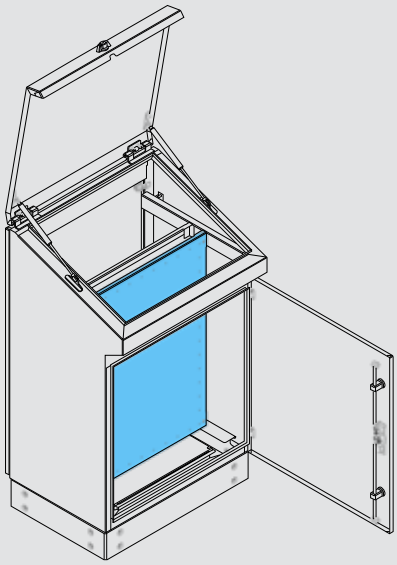

Mounting plate

Console Width	Order Code
600	EK MK 06
800	EK MK 08
1000	EK MK 10
1200	EK MK 12

Mounting Profile - EG MA

It is designed for cable arrangement inside the door. It is selected according to the door width.

Material : Galvanized steel sheet
Surface : Galvanized, Not Painted
Content : 1 piece of Mounting rail
2 piece of M5x8 self-tapping screw

Applicable Series: EK ES ED HS XS

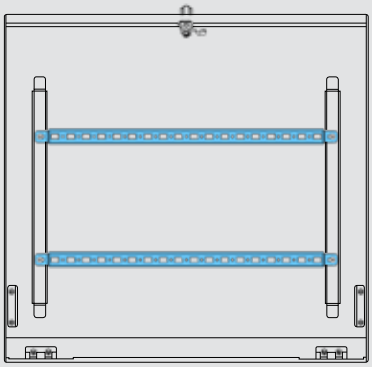

Mounting rail

Console Width	Order Code
600	EG MA 0450
800	EG MA 0650
1000	EG MA 0850
1200	EG MA 1050

Unless otherwise specified, all dimensions are in mm.

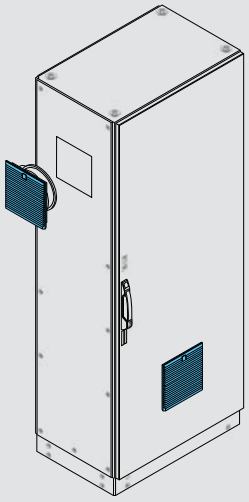

Fan-Filter Unit - EG FAN

It is designed for cooling when the ambient temperature is lower than the interior temperature of the enclosure.

- Quick and easy assembly without tools
- Quick and easy filter change from outside
- IP44 protection class

Material : Plastic
Surface : RAL 7035 (Grey Colour)
Content : 1 piece of plastic filtered fan

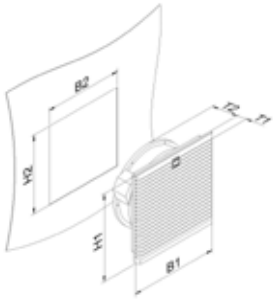

Applicable Series: EM EO EE HM XM EL ES ED XS EK

Fan-filter unit

Order Code	Product Dimension	Voltage V	Frequency Hz	Flow A	Power W	Noise Level dBA	Fan Flow m³/h
EG FAN 12	150x150	220/240	50/60	0,14	21	48	82
EG FAN 25	250x250	220/240	50/60	0,22	38	59	300

Roller bearing motors are used in fan.

Fan-filter unit

Order Code	B1 x H1 mm	B2 x H2 mm	T1 mm	T2 mm
EG FIL-FAN 12	150x150	123x123	13	67
EG FIL-FAN 25	250x250	223x223	13	115

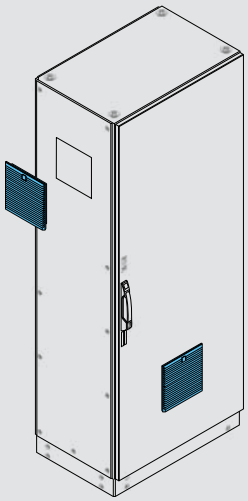

Filter Unit - EG FIL

It is designed for cooling when the ambient temperature is lower than the interior temperature of the enclosure.

- Quick and easy assembly without tools
- Quick and easy filter change from outside
- IP44 protection class

Material : Plastic
Surface : RAL 7035 (Grey Colour)
Content : 1 piece of plastic filtered louvre
Applicable Series: EM EO EE HM XM EL ES ED XS EK

Filter unit

Product Dimension	Protection Class	Order code
150x150	IP44	EG FIL 12 44
250x250	IP44	EG FIL 25 44

Spare Filter - EG FS

It is designed to be used as a spare in filtered louvres.

- 5 pcs filter foam, • Washable, • G2 class

Spare Filter (IP44)

Product Dimension	Order code
125x125	EG FS 12 44
250x250	EG FS 25 44

Thermostat - EG ET

It is used to control the fans that can be operated in case the temperature inside the enclosure increases.

- 0-60 °C temperature setting range
- Quick and easy mounting feature, suitable for 35 mm DIN rail

Material : ABS UL94 V0 Flame retardant
Content : 1 piece of Thermostat

Applicable Series: EM EO EE HM XM EL ES ED XS EK

Thermostat

Order Code	EG ET 01

Fan-Filter Unit With Thermostat - EG FAT

It is designed for cooling when the ambient temperature is lower than the interior temperature of the enclosure.

- 0-60 °C temperature setting range
- Quick and easy mounting feature, suitable for 35 mm DIN rail

Material : ABS UL94 V0 Flame retardant
Content : 1 piece of Filtered fan with thermostat

Applicable Series: EM EO EE HM XM EL ES ED XS EK

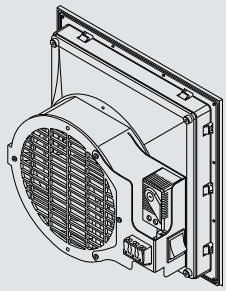

Fan-filter unit with thermostat

Order Code	EG FAT 25

Note: For fan and filter details, please check product pages with EG FAN and EG FIL codes.

Other Accessories

M5x8 Self-Tapping Screw - EG CK 5

Special spiral metric thread structure. It has self-tapping feature for sheet metal surface.

Material : Steel
Surface : Galvanized coating
Content : 100 pieces of M5x8 self-tapping screw

Applicable Series

ES ED EL EM EO EE ET
EK HS HM XS XM XT

M5x8 self-tapping screw

Order Code	EG CK 5

Snap-On Gasket - EG GC

It is designed to prevent damages from sharp surfaces.

- Can be used by cutting to desired size
- It has a clawed structure that provides ease of assembly.

Material : PVC
Surface : Black colour
Content : Shown as in the table below.

Applicable Series

ES ED EL EM EO EE ET
EK HS HM XS XM XT

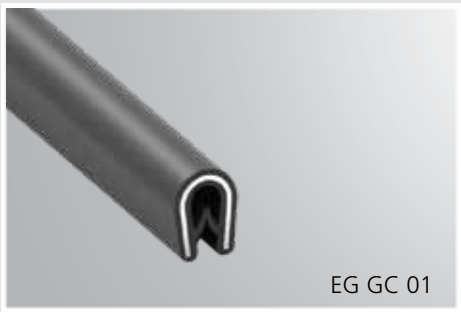

EG GC 01

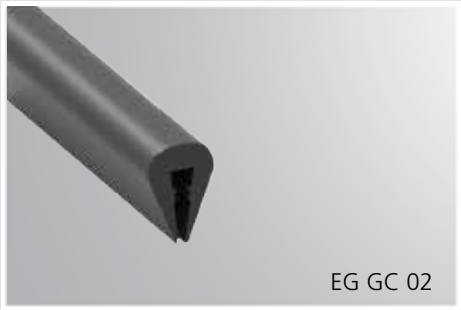

EG GC 02

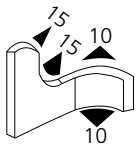

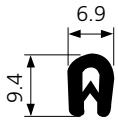

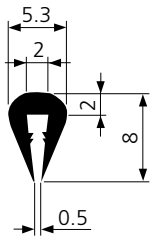

Snap-on gasket

Content	Sheet Range	Wire-Reinforced	Order Code
3 meters	1.0 - 2.0 mm	Yes	EG GC 01
4 meters	0.8 - 1.5 mm	No	EG GC 02

Project Document Pocket - EG PC

It has the feature of sticking with self-adhesive double-sided tape suitable for A4 paper size. It can be fixed with bolts if desired.

Material	: Plastic
Surface	: Black colour
Content	: 1 piece of Plastic document pocket

Applicable Series

ES ED EM EO EE
EK HS HM XS XM

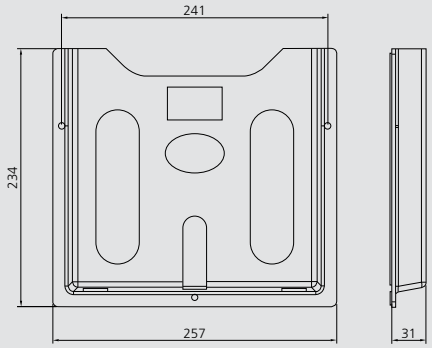

Project document pocket

Order Code	EG PC

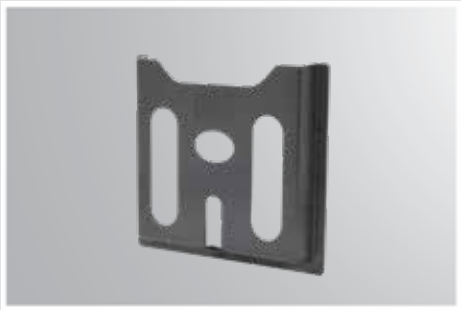

FLOOR-STANDING ENCLOSURES

Floor-Standing Enclosures

	Page 83	Page 99	Page 111
	ES	**ED**	**EL**
Modularity	Modular	Modular	Modular
Framework	Galvanized + Painted	Galvanized	Galvanized
Carrying Capacity	1500 kg	1500 kg	1200 kg
Protection Class	Up to IP55	Up to IP55	Up to IP55
Doors	Aluminium front bar and partial door application	Only full height door	Only full height door
Height	1800 - 2000 - 2200	1800 - 2000 - 2200	1800 - 2000 - 2200

Unless otherwise specified, all dimensions are in mm.

Outdoor Floor-Standing Enclosures

Painted with high corrosion resistance paint

Stainless Steel Floor Standing Enclosures

AISI 304 or AISI 316 Stainless-Steel

Page 123	Page 129	Page 135	Page 141
HS	**HF**	**XS**	**XH**
Modular	Monoblock	Modular	Modular
Galvanized+Painted	Galvanized + Painted (Welded)	Stainless-steel	Stainless-steel
500 kg	500 kg	1500 kg	500 kg
Up to IP55	Up to IP66	Up to IP55	Up to IP55
Only full height door	Only full height door	Only full height door	Only full height door
1800 - 2000 - 2200	1600 - 2000	1400 - 1600 - 1800 - 2000 - 2200	1400 - 1600 - 1800 - 2000 - 2200

NOTE: HS, XS and XH modular floor standing enclosures are mounted in our factory before shipment."

Unless otherwise specified, all dimensions are in mm.

FLOOR-STANDING ENCLOSURES

S SERIES

E-Kabin S Series
Electrical Enclosures

E-Kabin S Series floor-standing enclosures are designed to be used in professional high current applications. They are suitable for indoor applications and have modular structure, which enables expansion by combining side by side. Depending on selection of the door they can have IP55 or IP41 protection class. Electrostatic powder paint are applied on pre-galvanized steel sheet on all accessories including main structure that come into contact with the external environment. Bottom plate is included in the standard supply content.

Partial door option that may be needed in high current applications is available in this product series.

Type of Mounting	: Floor-Standing
Modularity	: Modular
Application	: Indoor
Protection Class	: IP55, IP41 - depending on front door type
Framework	: Painted, 2 mm Pre-Galvanized sheet
Paint	: Epoxy - polyester powder paint
Colour	: Standard RAL 7035 (Grey Colour)
Environmental Class	: According to EN 60721 - 3 - 3 IE33
Standards	: IEC 61439-1 IEC 62208 IEC 60529 IEC 62262

Features

Aesthetical outlook

Front bar, made of anodized aluminium, provides aesthetical outlook.

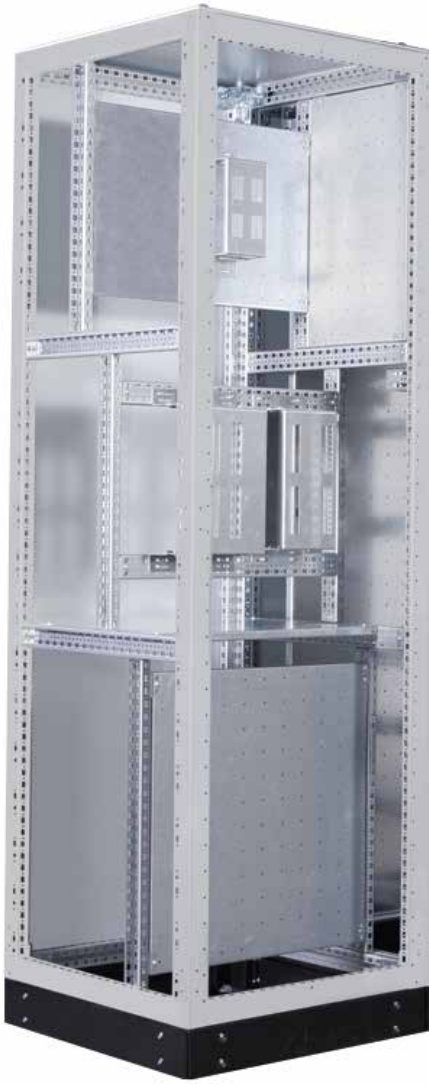

Separation options for power distribution applications

Horizontal partitioning

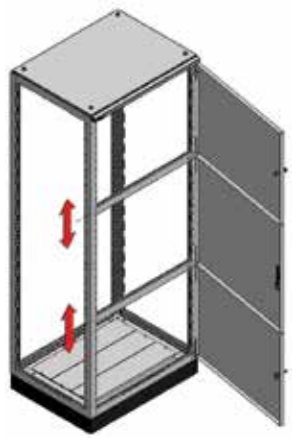

Reliable locking system

Locking system enables the door to be fixed to the framework at four different points.

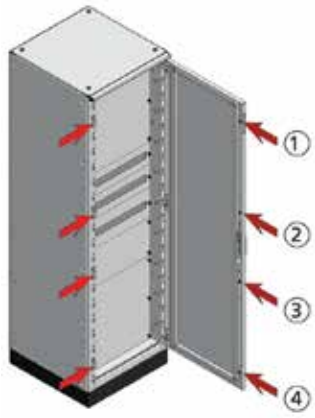

Robust Framework

Its strong framework structure allows doors and covers to be fixed after electro-assembly.

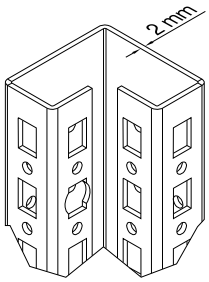

Doors with ventilation louvres

Doors with ventilation louvres that can be used in various applications can be selected as standard.

Wide range of door type options

- Plain
- Tempered Glass (4 mm)
- Ventilated
  IP41 washable filter and filter holder grid

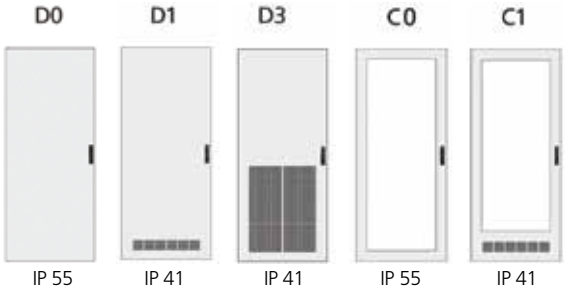

Modular Design - side-by-side expandability

Thanks to its modular structure, it is possible to assemble and expand it side by side for multiple combinations.

- Front and rear door possibility
- Changeable door opening direction
- Corner module application

Features

Polyurethane sealing gasket

Foam-in place gasket applied to the door does not lose its elasticity in time and provides protection against dust and water.

High resistance against corrosion

Framework components are made of 2 mm pregalvanized sheet steel and painted. Necessary precautions are taken to secure earthing contiunity while connecting the piecess together and it is certified.

Modular bottom plate arrangement

Bottom plate arrangement complying with high protection degree provides comfort with possibility of sliding piecess. Bottom plates can be equipped with different brushes which are supplied as accessories.

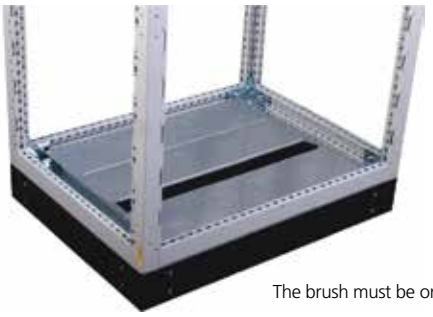

The brush must be ordered separately.

Stackable plinth

Thanks to its modular plinth structure, plints can be mounted on top of each other to increase the enclosure height.

Ventilation module accessory

Ventilation module option for high-capacity natural ventilation

Hinged cover plates

Cover plates are manufactured as hinged and openable. Thus, it is possible to intervene without removing the cover plate.

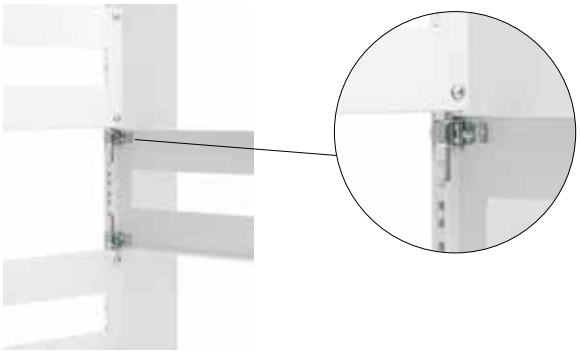

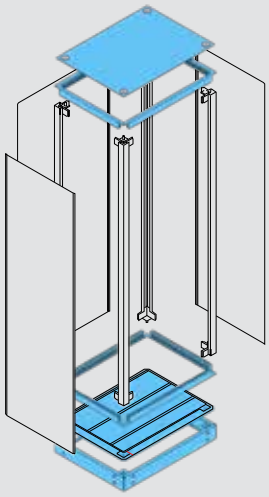

Module Set - ES MS

It includes horizontal rails, top cover and plinth set to form the framework structure.

Material : Galvanized steel sheet
Surface : Painted, RAL 7035 (Grey Colour)
Ral 9005 (Black) (Plinth)
Content : 4 pieces of horizontal rails (in width)
4 pieces of Horizontal rails (in depth)
1 piece of Top cover
1 piece of Top cover connection pack
1 piece of Plinth set
1 piece of Plinth connection pack
1 set of Bottom gland plate

Applicable Series ES

Module set

Enclosure Rated Width	Enclosure Rated Depth	Order Codes
400	400	ES MS 0404
	500	ES MS 0405
	600	ES MS 0406
	700	ES MS 0407
	800	ES MS 0408
500	400	ES MS 0504
	500	ES MS 0505
	600	ES MS 0506
	700	ES MS 0507
	800	ES MS 0508
600	400	ES MS 0604
	500	ES MS 0605
	600	ES MS 0606
	700	ES MS 0607
	800	ES MS 0608
700	400	ES MS 0704
	500	ES MS 0705
	600	ES MS 0706
	700	ES MS 0707
	800	ES MS 0708
800	400	ES MS 0804
	500	ES MS 0805
	600	ES MS 0806
	700	ES MS 0807
	800	ES MS 0808

Module set for enclosures with overlapping door

Enclosure Rated Width	Enclosure Rated Depth	Order Codes
1000	400	ES MS 5504
	500	ES MS 5505
	600	ES MS 5506
	700	ES MS 5507
	800	ES MS 5508
1200	400	ES MS 6604
	500	ES MS 6605
	600	ES MS 6606
	700	ES MS 6607
	800	ES MS 6608

Unless otherwise specified, all dimensions are in mm.

Uprights Set - ES DP

It is used vertically to form the enclosure framework.

Material : Galvanized steel sheet
Surface : Painted, RAL 7035 (Grey Colour)
Content : 4 pieces of Uprights
8 pieces of Corner connection plates and fasteners
1 piece of Fittings set

Applicable Series: ES

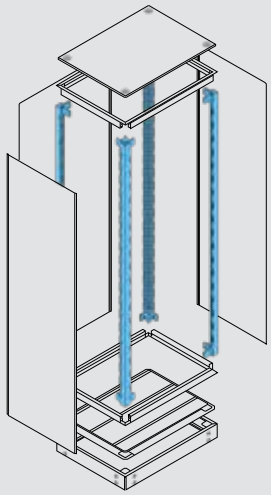

Uprights set

Enclosure Rated Height	Order Codes
1800	ES DP 18
2000	ES DP 20
2200	ES DP 22

Intermediary Upright Rail - ES DO

- ES DO is designed to be installed between fixed panels at rear side of eclosures with overlapping door.

Material : Galvanized steel sheet
Surface : Painted, RAL 7035 (Grey Colour)
Content : 1 piece of intermediary upright
1 piece of Fittings set

Applicable Series: ES HS

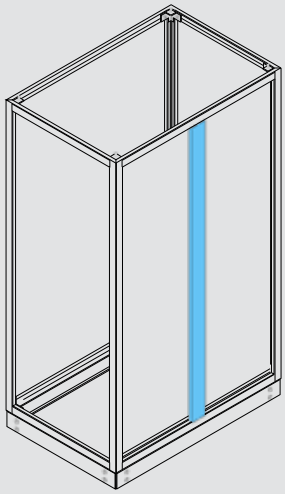

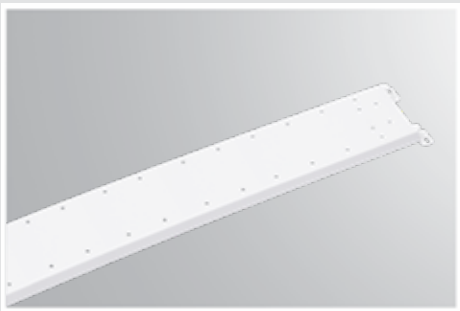

Intermediary upright

Enclosure Rated Height	Order Codes
1800	ES DO 18
2000	ES DO 20
2200	ES DO 22

Note: This item must be ordered additionally to form an overlapping door enclosure.
They are used for fixing two rear fixed panels in the middle of the enclosure rear side.

Unless otherwise specified, all dimensions are in mm.

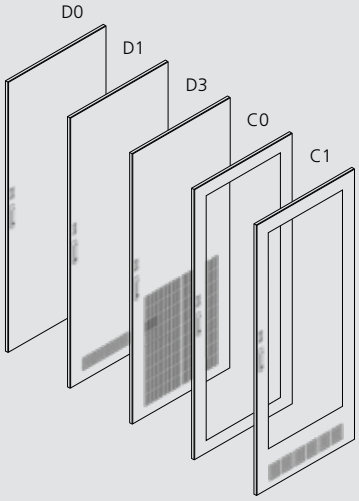

Unless otherwise specified, all dimensions are in mm.

Front Door - ES OK

Material : Galvanized steel sheet
Surface : Painted, RAL 7035 (Grey Colour)
Content : 1 piece of Front door
1 piece of Front bar
1 piece of Lock
1 piece of Fittings set

Applicable Series ES

Front door

Enclosure Rated Height	Enclosure Rated Width or Depth	Order Codes
1800	400	ES OK 1804 D0
	500	ES OK 1805 D0
	600	ES OK 1806 D0
	700	ES OK 1807 D0
	800	ES OK 1808 D0
	500+500	ES OK 1855 D0
	600+600	ES OK 1866 D0
2000	400	ES OK 2004 D0
	500	ES OK 2005 D0
	600	ES OK 2006 D0
	700	ES OK 2007 D0
	800	ES OK 2008 D0
	500+500	ES OK 2055 D0
	600+600	ES OK 2066 D0
2200	400	ES OK 2204 D0
	500	ES OK 2205 D0
	600	ES OK 2206 D0
	700	ES OK 2207 D0
	800	ES OK 2208 D0
	500+500	ES OK 2255 D0
	600+600	ES OK 2266 D0

Note: Given codes are for D0 door types. If D1, D3, C0 or C1 type door is prefered last two digits of the code must be changed accordingly.
For C0-C1 type of doors, temperred glass is used.

MA Mounting rails suitable for inner side of doors

Front Door Width	Length L	Code
50 cm	34,5 cm	EG MA 0350
60 cm	44,5 cm	EG MA 0450
70 cm	54,5 cm	EG MA 0550
80 cm	64,5 cm	EG MA 0650

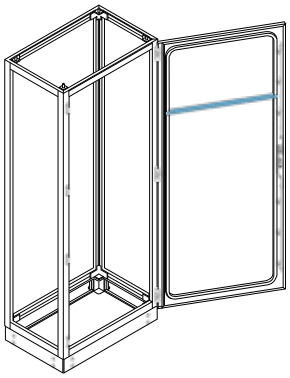

Fixed Panel - EG SK

It is used to close the rear and/or sides of the panels. The design of the rear and side fixed panels are the same.

Material : Galvanized steel sheet
Surface : Painted, RAL 7035 (Grey Colour)
Content : 1 piece of Fixed panel
1 piece of Fittings set

Applicable Series ES ED

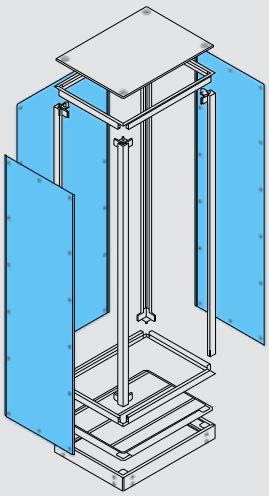

SK Fixed panel

Enclosure Rated Height	Enclosure Rated Width or Depth	Order Codes
1800	400	EG SK 1804
	500	EG SK 1805
	600	EG SK 1806
	700	EG SK 1807
	800	EG SK 1808
2000	400	EG SK 2004
	500	EG SK 2005
	600	EG SK 2006
	700	EG SK 2007
	800	EG SK 2008
2200	400	EG SK 2204
	500	EG SK 2205
	600	EG SK 2206
	700	EG SK 2207
	800	EG SK 2208

Unless otherwise specified, all dimensions are in mm.

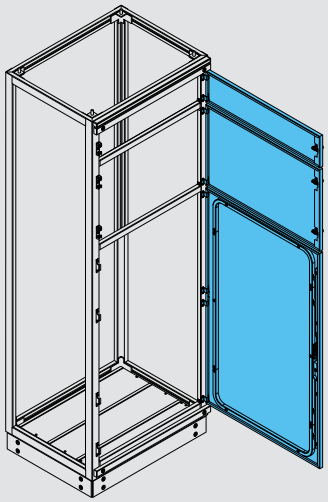

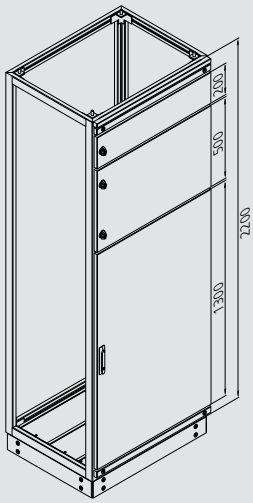

Example application

Rated height : 2200 mm
Rated width : 800 mm

Unless otherwise specified, all dimensions are in mm.

Partial Door - ES PK

It is designed to use for horizontal partitioning for power distribution applications.

Material : Galvanized steel sheet
Surface : Painted, RAL 7035 (Grey Colour)
Content : 1 piece of Partial door
1 piece of Fittings set
(lock, hinge, grounding kit)

Applicable Series ES

Note: When using partial doors, Front Bars have to be ordered additionally.

Design of partial door is symmetric.Opening direction can be changed.

The sum of partial doors' rated heights used in an enclosure has to be 20 cm less than enclosure rated height.

Partial door

Partial Door Rated Height	Enclosure Rated Width
150 (015)	400 (04)
200 (020)	500 (05)
250 (025)	600 (06)
300 (030)	700 (07)
350 (035)	800 (08)
400 (040)	
450 (045)	
500 (050)	
550 (055)	
600 (060)	
650 (065)	
700 (070)	
750 (075)	
800 (080)	
850 (085)	
900 (090)	
950 (095)	
1000 (100)	
1050 (105)	
1100 (110)	
1150 (115)	
1200 (120)	
1250 (125)	
1300 (130)	
1400 (140)	
1500 (150)	
1600 (160)	
1700 (170)	
1800 (180)	
1900 (190)	

Sample Coding : ES PK 050 08

Partial Door Rated Height — Enclosure Rated Width

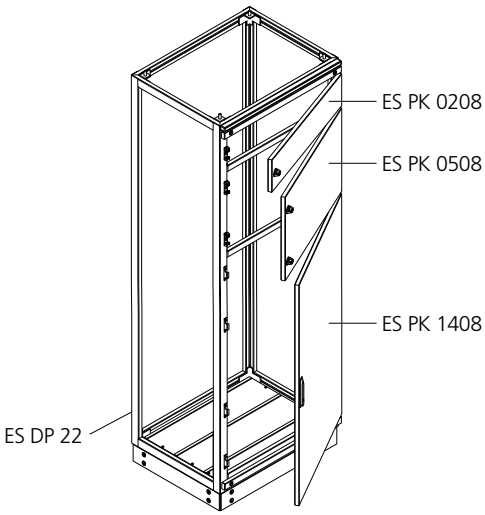

Example Application

Note: The type and quantity of locks are dependent on the partial door's rated height.

Example application

Rated height : 2200 mm
Rated width : 800 mm

Horizontal Divider Rail - ES YA

It is designed to use for horizontal partitioning for power distribution applications. It shall be used between two partial doors.

Material : Galvanized steel sheet
Surface : Painted, RAL 7035 (Grey Colour)
Content : 1 piece of ES YA Horizontal divider rail
1 piece of Fixing and fittings set

Applicable Series ES

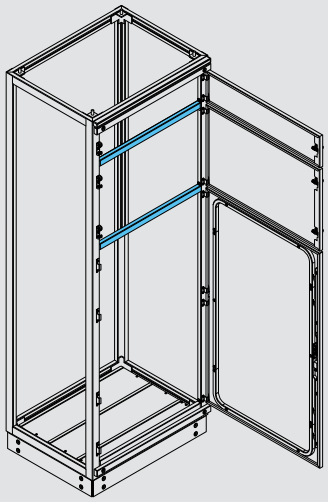

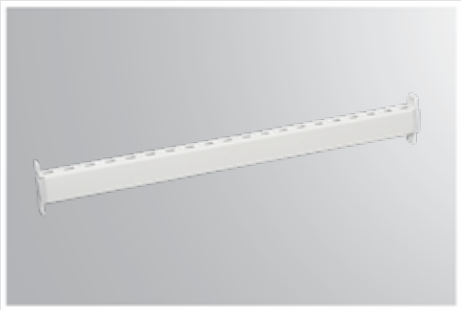

Horizontal divider rail

Enclosure Rated Width	Order Codes
400	ES YA 04
500	ES YA 05
600	ES YA 06
700	ES YA 07
800	ES YA 08

Front Bar - ES OET

In case of using ES PK, it must be ordered separately as 1 piece per section.

Material : Aluminium
Surface : Anodized coating
Content : 1 piece of Front bar
1 piece of Fittings set

Applicable Series ES

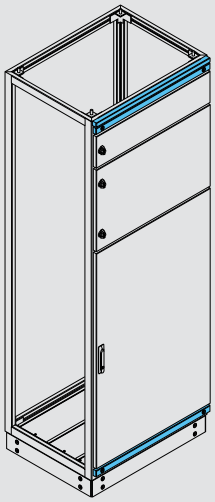

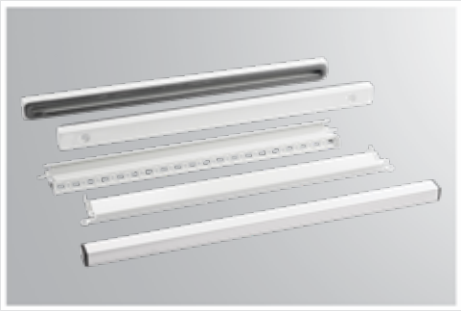

Front bar

Enclosure Rated Width	Order code
400	ES OET 04
500	ES OET 05
600	ES OET 06
700	ES OET 07
800	ES OET 08

Unless otherwise specified, all dimensions are in mm.

Mounting Plate

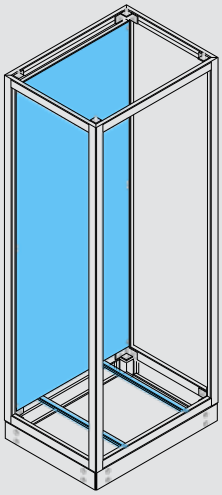

Full Height Mounting Plate - EG MK

It is designed for general usage.

Material : Galvanized steel sheet
Content : 1 piece of Full height mounting plate
2 pieces of Depth rails
1 piece of Fittings set

Applicable Series: EL ES ED HS XS

Full height mounting plate

Enclosure Rated Height	Enclosure Rated Width	Enclosure Rated Depth	Steel Sheet Thickness
HH	WW	DD	TXX
12*	04	04	T15
14*	05	05	T20
16*	06	06	T30
18	07	07	
20	08	08	
22	10		
	12		

* Only T20 type is available in these dimensions (HH=12,14,16).

Mounting plate information

TXX	Steel Sheet Thickness	Maximum Carriage Capacity	Surface Protection
T15	1,5 mm	300 kg	Without Folio
T20	2 mm	600 kg	With Folio
T30	3 mm	600 kg	Without Folio

Sample Coding: EG MK 20 08 05 T20

Dimension Information — Mounting Plate Information

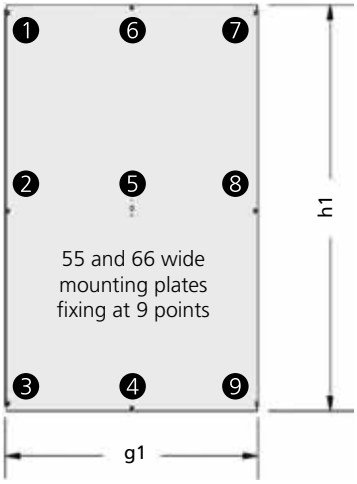

Height	Net Dimension h1	Width	Net Dimension g1
1800	1645 mm	400	346 mm
2000	1845 mm	500	446 mm
2200	2045 mm	600	546 mm
		700	646 mm
		800	746 mm
		1000	946 mm
		1200	1146 mm

Full height mounting plates can be fixed on rear uprights. If full height mounting plate is required to be adjustable through the depth, EG MKT Sliding rail accessories must be used. Sliding rail accessories must be ordered separately.

Full Height Mounting Plate Application Examples

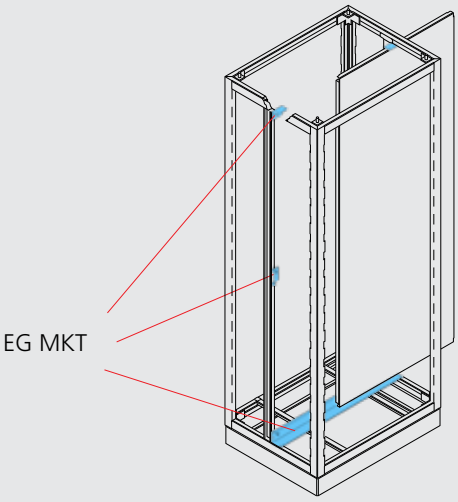

Adjustable Depth Application

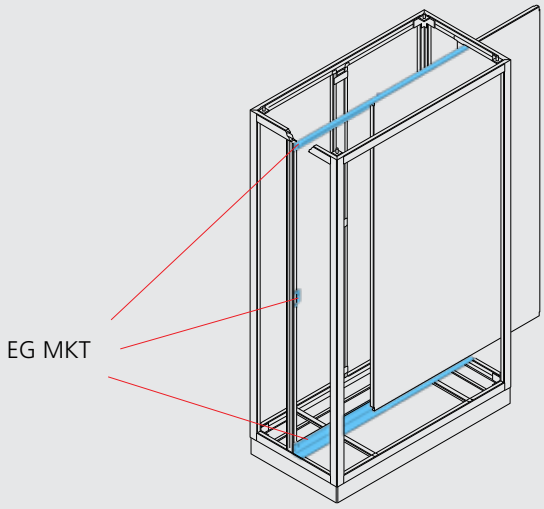

Adjustable Depth Application for ≥1000 mm Width

EG MKT page 150

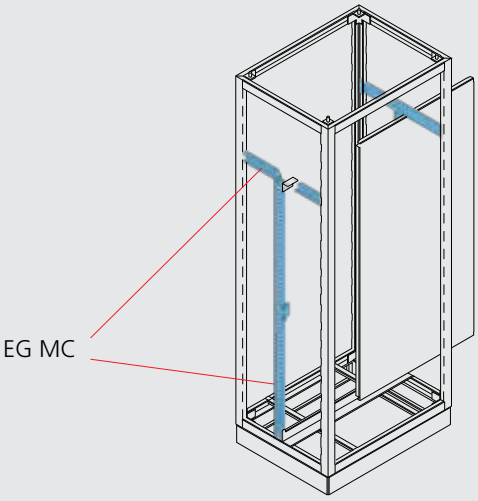

Short Height Application

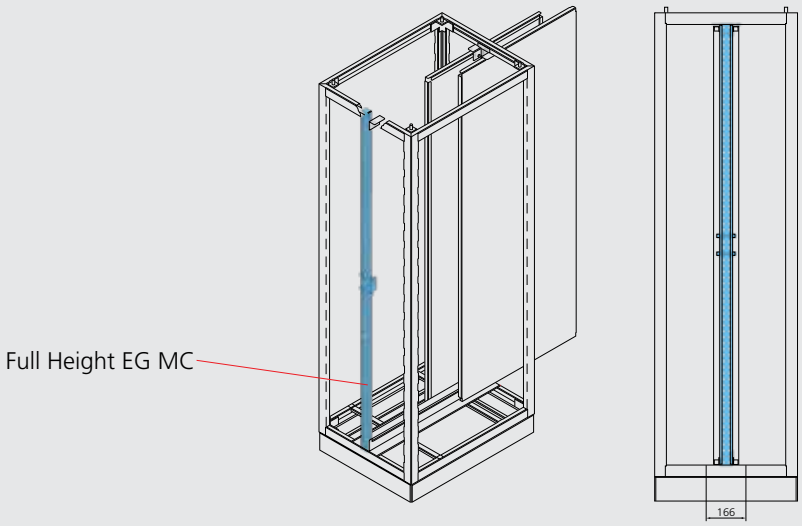

Back to Back Application

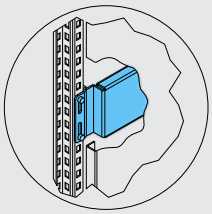

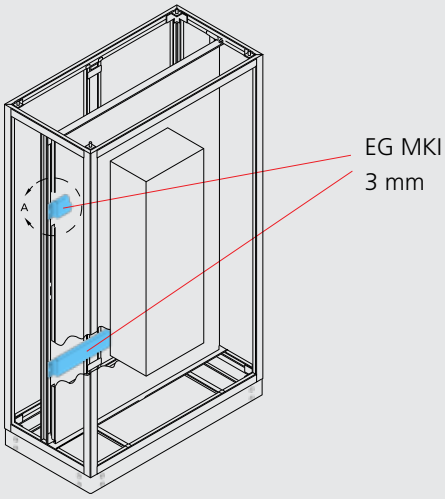

Inner Support Application

EG MKI page 151

Inner support rail EG MKI is providing additional strength for fixing heavy equipment on full height mounting plates. Full height mounting plate is fixed after EG MKI is positioned and fixed, so that it's rear surface rests on EG MKI's front surface.

Dimensions

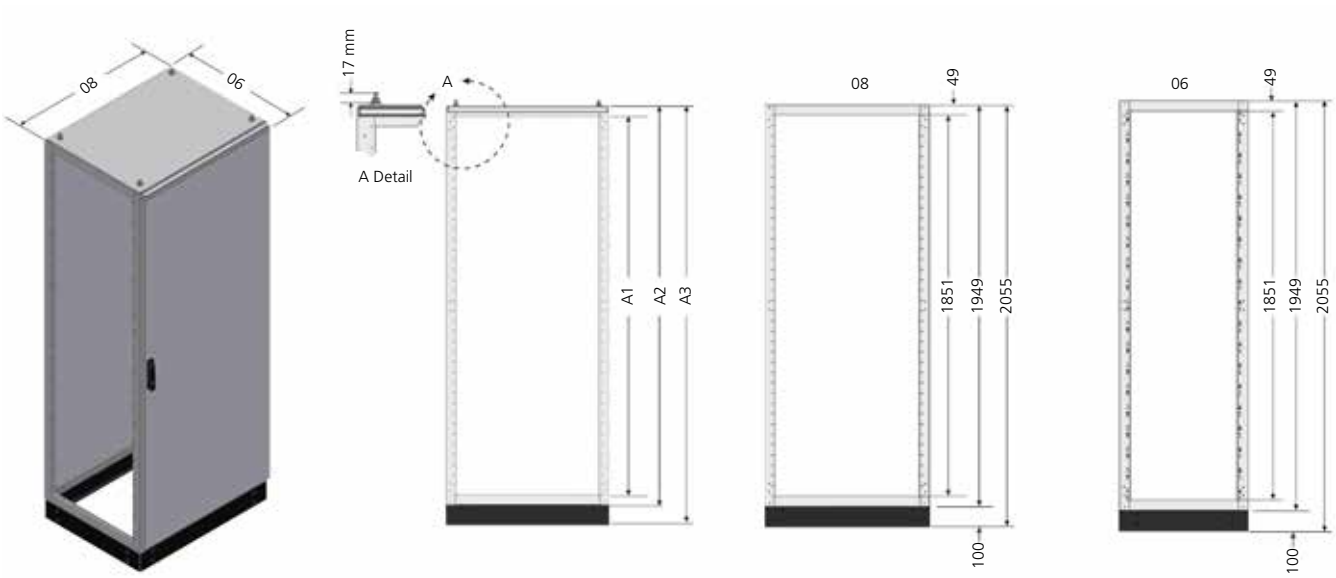

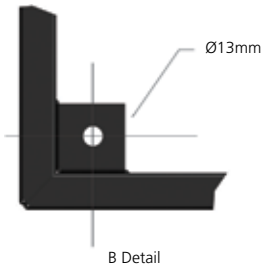

Net Dimensions	Enclosure Rated Height		
	1800	**2000**	**2200**
A1	1651 mm	1851 mm	2051 mm
A2	1749 mm	1949 mm	2149 mm
A3	1855 mm	2055 mm	2255 mm

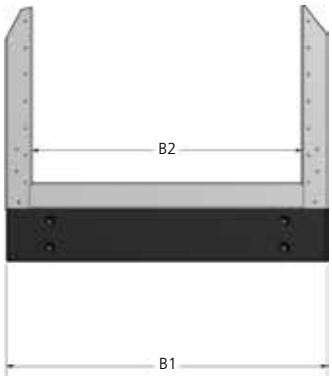

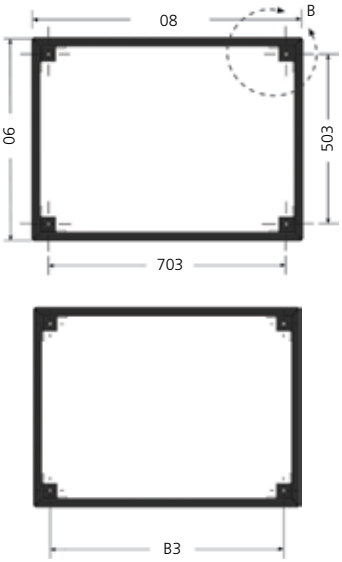

Net Dimensions	Enclosure Rated Depth				
	400	**500**	**600**	**700**	**800**
B1	396 mm	496 mm	596 mm	696 mm	796 mm
B2	301 mm	401 mm	501 mm	601 mm	701 mm
B3	303 mm	403 mm	503 mm	603 mm	703 mm

D0

D0 type front door usable space height dimensions (A4)

Dimension / A4	ES OK 18	ES OK 20	ES OK 22
Net Dimension	1605 mm	1805 mm	2005 mm

D0-1-3 type front door usable area width dimensions (B4)

Dimension / B4	300	400	500	600	700	800
Net Dimension	140 mm	240 mm	340 mm	440 mm	540 mm	640 mm

Example: ES OK 2008 D0

D1

D1 type front door usable space height dimensions (A5)

Dimension / A5	ES OK 18	ES OK 20	ES OK 22
Net Dimension	1430 mm	1630 mm	1830 mm

Example: ES OK 2008 D1

D3

D3 type front door usable space height dimensions (A6)

Dimension / A6	ES OK 18	ES OK 20	ES OK 22
Net Dimension	801 mm	1001 mm	1201 mm

Example: ES OK 2008 D3

Ventilation net opening		
Height	Width	OK D1
18/20/22	04	0,0095 m^2
18/20/22	05	0,0141 m^2
18/20/22	06	0,0192 m^2
18/20/22	07	0,0239 m^2
18/20/22	08	0,0287 m^2

Height	Width	OK D3
18	04	0,060 m^2
18	05	0,092 m^2
18	06	0,0121 m^2
18	07	0,153 m^2
18	08	0,185 m^2
20	04	0,060 m^2
20	05	0,092 m^2
20	06	0,121 m^2
20	07	0,153 m^2
20	08	0,185 m^2
22	04	0,060 m^2
22	05	0,092 m^2
22	06	0,121 m^2
22	07	0,153 m^2
22	08	0,185 m^2

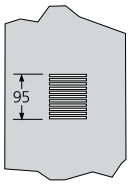

30 cm wide
D1 Front Door ventilation detail

Front Door Detail

ES OK 2008 D1

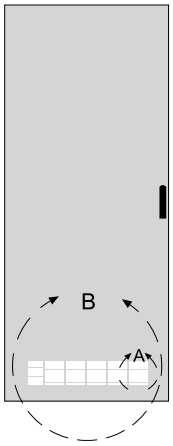

0,0574 m^2

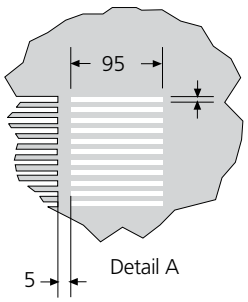

Detail A

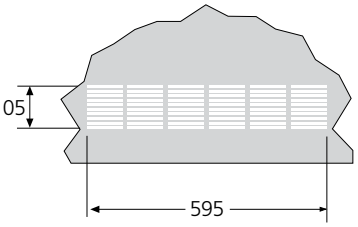

Detail B

Note: For forced ventilation calculations, please refer to fan cooling calculation technical information page.

FLOOR-STANDING ENCLOSURES

D SERIES

E-Kabin D Series
Electrical enclosures

E-Kabin D Series floor-standing panels are designed to be used in industrial applications. They are suitable for indoor applications and have modular structure, which enables expansion by combining side by side. Depending on selection of the door they can have IP55 or IP41 protection class.

Doors and covers are made of epoxy polyester powder paint on pre-galvanized sheet and its inner parts are made of pre-galvanized steel sheet. Their simple design provides functionality and economic solutions for various installations.

Type of Mounting	: Floor-Standing
Modularity	: Modular
Application	: Indoor, dry environment
Protection	: IP41, IP55
Framework	: Not Painted, 2 mm Pre-Galvanized steel sheet
Paint	: Epoxy - polyester powder paint
Colour	: Standard RAL 7035 (Grey Colour)
Environmental Class	: According to EN 60721 - 3 - 3 IE32
Standards	: IEC 61439-1, IEC 62208 IEC 60529, IEC 62262

Features

Stackable plinth

Thanks to its modular plinth structure, plints can be mounted on top of each other to increase the enclosure height.

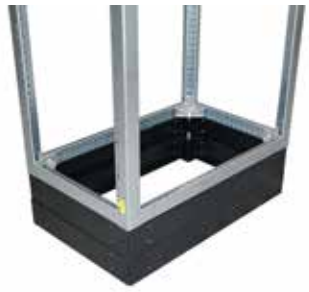

Modular Design - side-by-side expandability

Thanks to its modular structure, it is possible to assemble and expand it side by side for multiple combinations.

- Front and rear door possibility
- Changeable door opening direction
- Corner module application

Ventilation module accessory

Ventilation module option for high-capacity natural ventilation

Polyurethane sealing gasket

Foam-in place gasket applied to the door does not lose its elasticity in time and provides protection against dust and water.

Robust framework

Its strong framework structure allows doors and covers to be fixed after electro-assembly.

Doors with ventilation louvres

Doors with ventilation louvres that can be used in various applications can be selected as standard.

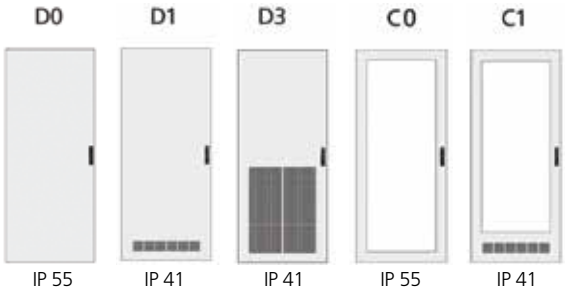

Wide range of Door Type Options

- Plain
- Tempered Glass (4 mm)
- Ventilated
  IP41 washable filter and filter holder grid

Functional full height mounting plate

Full height mounting plate and accessories, which can be selected in different thicknesses depending on the need, provides convenience in both expanded enclosure applications and heavy device mounting.

Reliable locking system

Locking system enables the door to be fixed to the framework at four different points.

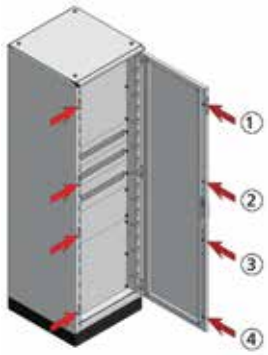

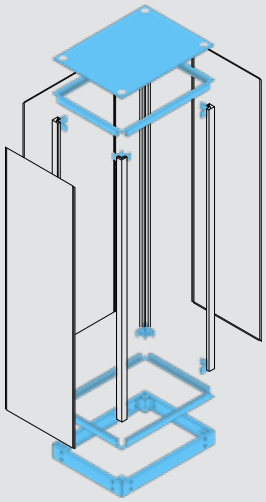

Module Set - ED MS

It includes horizontal rails, top cover and plinth set to form the framework.

Material : Pre-Galvanized steel sheet
Surface : Painted, RAL 7035 (Grey Colour)
Ral 9005 (Black)(Plinth)
Content : 4 pieces of Horizontal rails (in width)
4 pieces of Horizontal rails (in depth)
1 piece of Top cover
1 piece of Top cover connection pack
1 piece of Plinth set
1 piece of Plinth fittings pack
1 set of Corner fittings kit (8 pieces of Corner connection plates and fasteners)
Applicable Series ED

Module set

Enclosure Rated Width	Enclosure Rated Depth	Order Codes
400	400	ED MS 0404 (55,41)
	500	ED MS 0405 (55,41)
	600	ED MS 0406 (55,41)
	700	ED MS 0407 (55,41)
	800	ED MS 0408 (55,41)
500	400	ED MS 0504 (55,41)
	500	ED MS 0505 (55,41)
	600	ED MS 0506 (55,41)
	700	ED MS 0507 (55,41)
	800	ED MS 0508 (55,41)
600	400	ED MS 0604 (55,41)
	500	ED MS 0605 (55,41)
	600	ED MS 0606 (55,41)
	700	ED MS 0607 (55,41)
	800	ED MS 0608 (55,41)
700	400	ED MS 0704 (55,41)
	500	ED MS 0705 (55,41)
	600	ED MS 0706 (55,41)
	700	ED MS 0707 (55,41)
	800	ED MS 0708 (55,41)
800	400	ED MS 0804 (55,41)
	500	ED MS 0805 (55,41)
	600	ED MS 0806 (55,41)
	700	ED MS 0807 (55,41)
	800	ED MS 0808 (55,41)

Module set for enclosures with overlapping door

Enclosure Rated Width	Enclosure Rated Depth	Order Codes
1000	400	ED MS 5504 (55,41)
	500	ED MS 5505 (55,41)
	600	ED MS 5506 (55,41)
	700	ED MS 5507 (55,41)
	800	ED MS 5508 (55,41)
1200	400	ED MS 6604 (55,41)
	500	ED MS 6605 (55,41)
	600	ED MS 6606 (55,41)
	700	ED MS 6607 (55,41)
	800	ED MS 6608 (55,41)

Note: Supply contents include bottom plate when IP 55 protection class is selected and last two digits of the order code is "55". Example: ED MS 0506 55
(For Bottom Plate combinations please check page 182)

Supply contents do not include bottom plate when IP 41 protection class is selected. Example:ED MS 0506 41

Unless otherwise specified, all dimensions are in mm.

Uprights Set - ED DP

It is used vertically to form the enclosure framework.

Material : Galvanized steel sheet
Surface : Galvanized, Not Painted
Content : 4 pieces of Uprights

Applicable Series ED

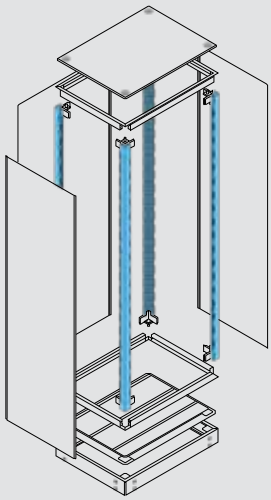

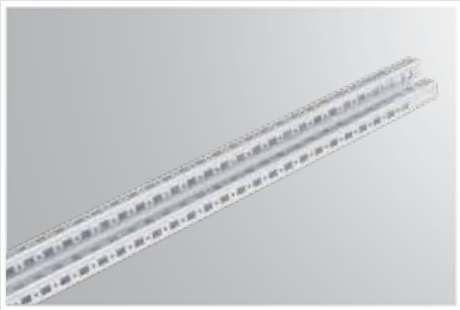

Uprights set

Enclosure Rated Height	Order Code
1800	ED DP 18
2000	ED DP 20
2200	ED DP 22

Intermediary Upright Rail - ED DO

ES DO is designed to be installed between fixed panels at rear side of eclosures with overlapping door.

Material : Galvanized steel sheet
Surface : Galvanized, Not Painted
Content : 1 piece of Vertical intermediary rail
1 piece of Fittings set

Applicable Series ED

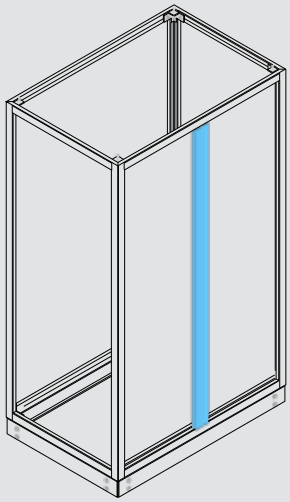

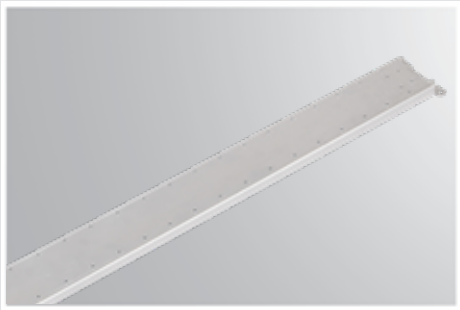

Intermediary upright rail

Enclosure Rated Height	Order Code
1800	ED DO 18
2000	ED DO 20
2200	ED DO 22

Unless otherwise specified, all dimensions are in mm.

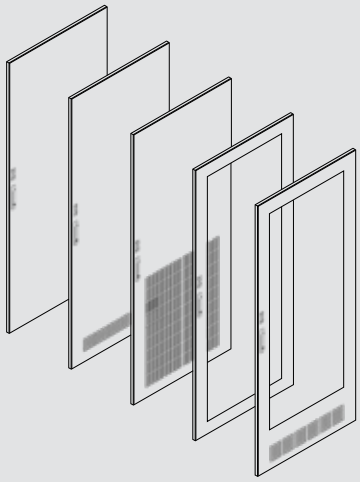

Front Door - ED OK

Material : Galvanized steel sheet
Surface : Painted, RAL 7035 (Grey Colour)
Content : 1 piece of Front door
1 piece of Lock
1 piece of Fittings set

Applicable Series ED

Front door

Enclosure Rated Height	Panel Rated Width or Depth	Order Codes
1800	400	ED OK 1804 D0
	500	ED OK 1805 D0
	600	ED OK 1806 D0
	700	ED OK 1807 D0
	800	ED OK 1808 D0
	500+500	ED OK 1855 D0
	600+600	ED OK 1866 D0
2000	400	ED OK 2004 D0
	500	ED OK 2005 D0
	600	ED OK 2006 D0
	700	ED OK 2007 D0
	800	ED OK 2008 D0
	500+500	ED OK 2055 D0
	600+600	ED OK 2066 D0
2200	400	ED OK 2204 D0
	500	ED OK 2205 D0
	600	ED OK 2206 D0
	700	ED OK 2207 D0
	800	ED OK 2208 D0
	500+500	ED OK 2255 D0
	600+600	ED OK 2266 D0

Note: Given codes are for D0 door types. If D1, D3, C0 or C1 type door is prefered last two digits of the code must be changed accordingly.

For C0-C1 type of doors, temperred glass is used.

MA Mounting rails suitable for inner side of doors

Front Door Width	Length L	Code
50 cm	34,5 cm	EG MA 0350
60 cm	44,5 cm	EG MA 0450
70 cm	54,5 cm	EG MA 0550
80 cm	64,5 cm	EG MA 0650

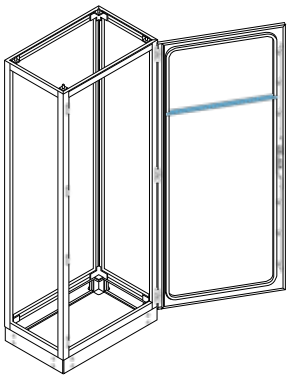

Unless otherwise specified, all dimensions are in mm.

Fixed Panel - EG SK

It is used to close the rear and/or sides of enclosures. The design of the rear and side fixed panels are the same.

Material : Galvanized steel sheet
Surface : Painted, RAL 7035 (Grey Colour)
Content : 1 piece of Fixed panel
1 piece of Fittings set

Applicable Series ES ED

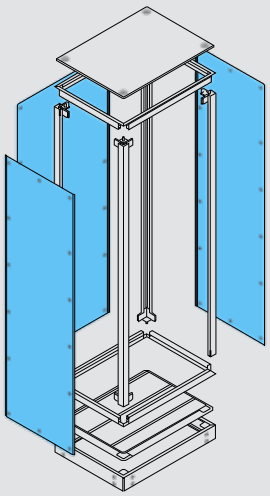

Fixed panel

Enclosure Rated Height	Enclosure Nominal Width or Depth	Order Code
1800	400	EG SK 1804
	500	EG SK 1805
	600	EG SK 1806
	700	EG SK 1807
	800	EG SK 1808
2000	400	EG SK 2004
	500	EG SK 2005
	600	EG SK 2006
	700	EG SK 2007
	800	EG SK 2008
2200	400	EG SK 2204
	500	EG SK 2205
	600	EG SK 2206
	700	EG SK 2207
	800	EG SK 2208

Unless otherwise specified, all dimensions are in mm.

Mounting Plate

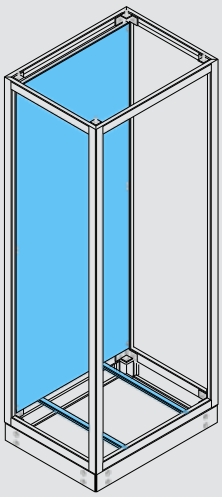

Full Height Mounting Plate - EG MK

It is designed for general usage.

Material : Galvanized steel sheet
Content : 1 piece of Full height mounting plate
2 pieces of Depth rails
1 piece of Fittings set

Applicable Series: EL ES ED HS XS

Full height mounting plate

Enclosure Rated Height	Enclosure Rated Width	Enclosure Rated Depth	Steel Sheet Thickness
HH	WW	DD	TXX
12*	04	04	T15
14*	05	05	T20
16*	06	06	T30
18	07	07	
20	08	08	
22	10		
	12		

* Only T20 type is available in these dimensions (HH=12,14,16).

Mounting plate information

TXX	Steel Sheet Thickness	Maximum Carriage Capacity	Surface Protection
T15	1,5 mm	300 kg	Without Folio
T20	2 mm	600 kg	With Folio
T30	3 mm	600 kg	Without Folio

Sample Coding: EG MK 20 08 05 T20

Dimension Information — Mounting Plate Information

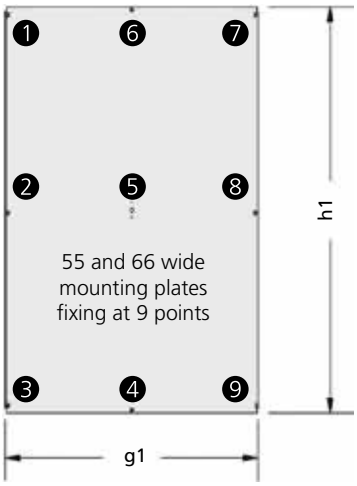

Height	Net Dimension h1	Width	Net Dimension g1
1800	1645 mm	400	346 mm
2000	1845 mm	500	446 mm
2200	2045 mm	600	546 mm
		700	646 mm
		800	746 mm
		1000	946 mm
		1200	1146 mm

Full height mounting plates can be fixed on rear uprights. If full height mounting plate is required to be adjustable through the depth, EG MKT Sliding rail accessories must be used. Sliding rail accessories must be ordered separately.

Full Height Mounting Plate Application Examples

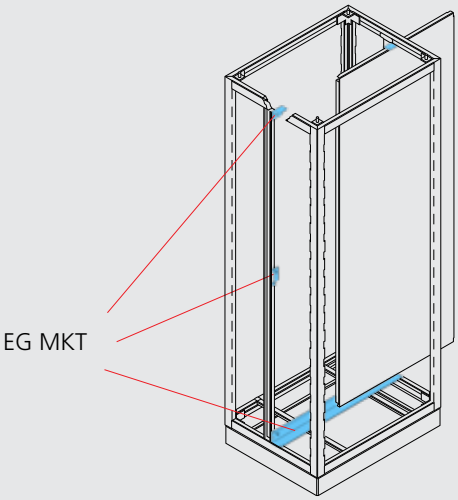

Adjustable Depth Application

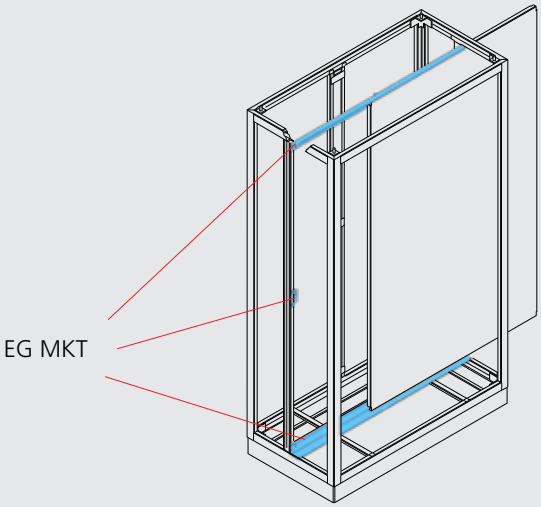

Adjustable Depth Application for ≥1000 mm Width

EG MKT page 150

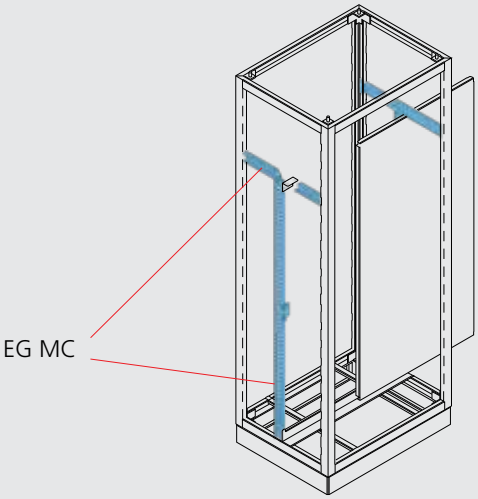

Short Height Application

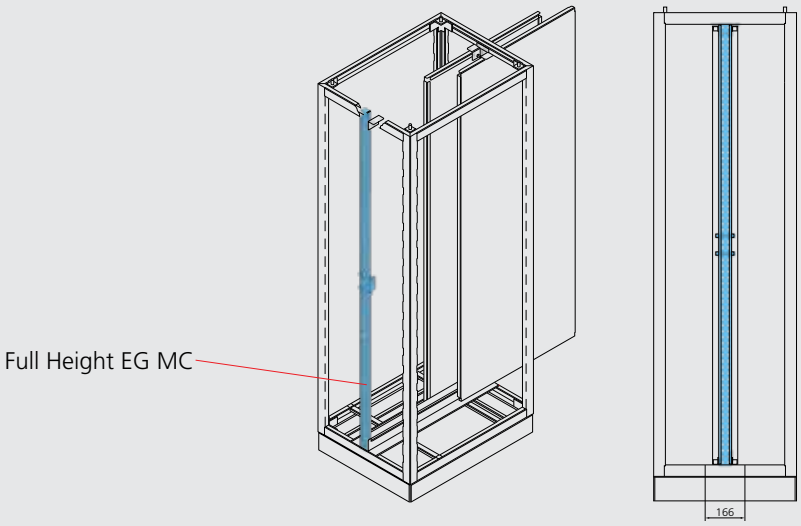

Back to Back Application

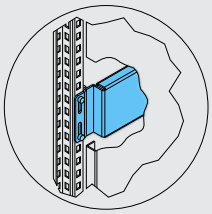

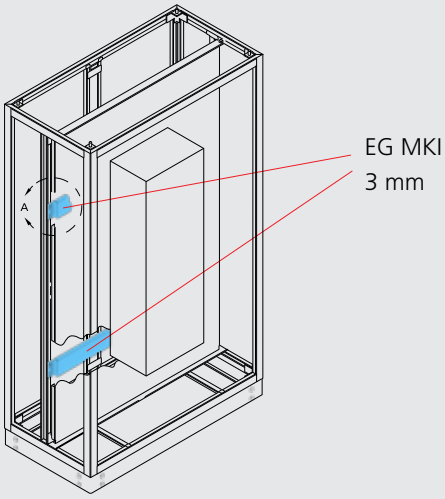

Inner Support Application

EG MKI page 151

Inner support rail EG MKI is providing additional strength for fixing heavy equipment on full height mounting plates. Full height mounting plate is fixed after EG MKI is positioned and fixed, so that it's rear surface rests on EG MKI's front surface.

Dimensions

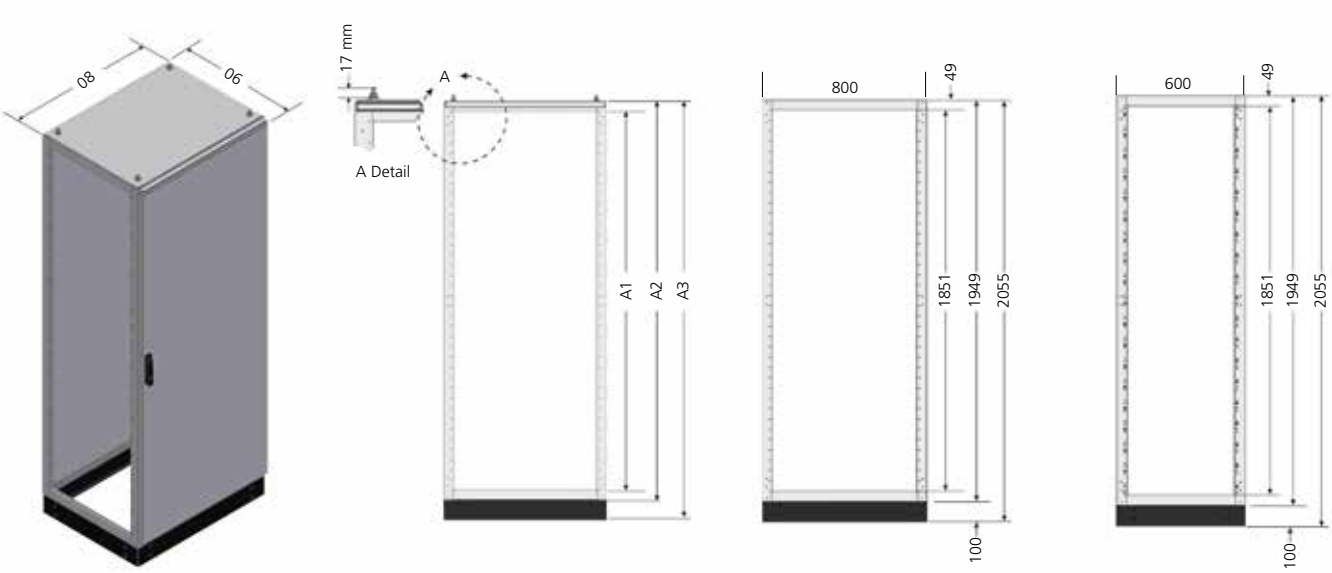

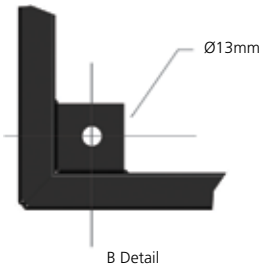

Net Dimensions	Enclosure Rated Height		
	1800	**2000**	**2200**
A1	1651 mm	1851 mm	2051 mm
A2	1749 mm	1949 mm	2149 mm
A3	1855 mm	2055 mm	2255 mm

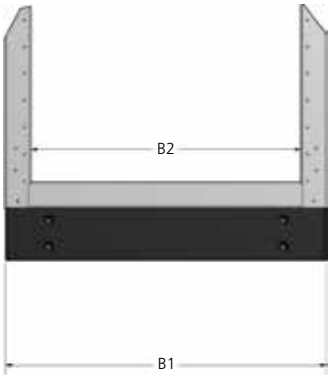

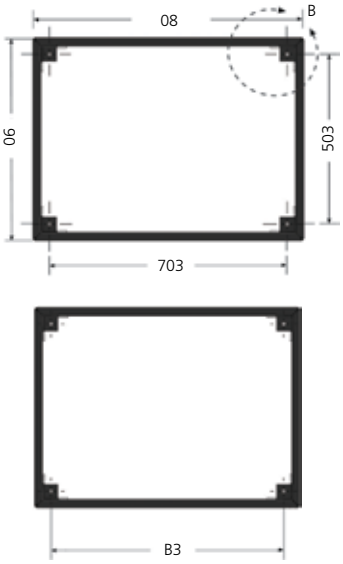

Net Dimensions	Enclosure Rated Depth				
	400	**500**	**600**	**700**	**800**
B1	396 mm	496 mm	596 mm	696 mm	796 mm
B2	301 mm	401 mm	501 mm	601 mm	701 mm
B3	303 mm	403 mm	503 mm	603 mm	703 mm

D0

D0 type front door usable space height dimensions (A4)

Dimension / A4	ED OK 18	ED OK 20	ED OK 22
Net Dimension	1605 mm	1805 mm	2005 mm

D0-1-3 type front door usable area width dimensions (B4)

Dimension / B4	300	400	500	600	700	800
Net Dimension	140 mm	240 mm	340 mm	440 mm	540 mm	640 mm

Example: ED OK 2008 D0

D1

D1 type front door usable space height dimensions (A5)

Dimension / A5	ED OK 18	ED OK 20	ED OK 22
Net Dimension	1430 mm	1630 mm	1830 mm

Example: ED OK 2008 D1

D3

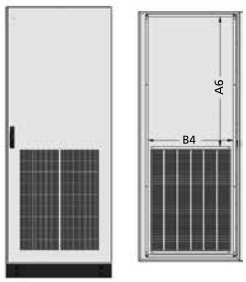

D3 type front door usable space height dimensions (A6)

Dimension / A6	ED OK 18	ED OK 20	ED OK 22
Net Dimension	801 mm	1001 mm	1201 mm

Example: ED OK 2008 D3

Ventilation net opening		
Height	Width	OK D1
18/20/22	04	0,0095 m²
18/20/22	05	0,0141 m²
18/20/22	06	0,0192 m²
18/20/22	07	0,0239 m²
18/20/22	08	0,0287 m²

Height	Width	OK D3
18	04	0,060 m²
18	05	0,092 m²
18	06	0,0121 m²
18	07	0,153 m²
18	08	0,185 m²
20	04	0,060 m²
20	05	0,092 m²
20	06	0,121 m²
20	07	0,153 m²
20	08	0,185 m²
22	04	0,060 m²
22	05	0,092 m²
22	06	0,121 m²
22	07	0,153 m²
22	08	0,185 m²

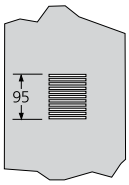

30cm wide D1 Front Door ventilation detail

Front Door Detail

ES OK 2008 D1

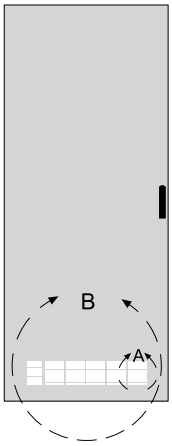

0,0574 m²

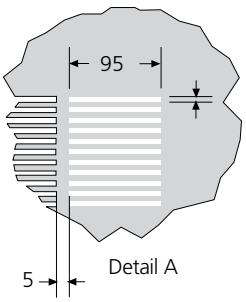

Detail A

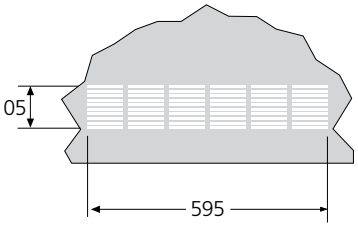

Detail B

Note: For forced ventilation calculations, please refer to fan cooling calculation technical information page.

FLOOR-STANDING ENCLOSURES

L SERIES

E-Kabin L Series
Electrical Enclosures

E-Kabin L Series floor-standing enclosures are designed to be used in industrial applications. L Series enclosures are suitable for indoor applications and have modular structure, which enables expansion by combining side by side. It is produced in IP40 protection class as standard, and the protection class can be upgraded to IP55 by ordering the IP55 kits separately. Doors and covers are made of pre-galvanized steel sheet coated with epoxy polyester powder paint and inner parts are also made of pre-galvanized steel. The product adds value with its simple design and functionality in different applications.

Type of Mounting	: Floor-Standing
Modularity	: Modular
Application	: Indoor, dry environment
Protection Class	: IP40, IP55 (optional)
Framework	: Pre-galvanized steel sheet
Paint	: Epoxy - polyester powder paint
Colour	: Standard RAL 7035 (Grey Colour)
Environmental Class	: According to EN 60721 - 3 - 3 IE32
Standards	: IEC 61439-1, IEC 62208 IEC 60529, IEC 62262

Features

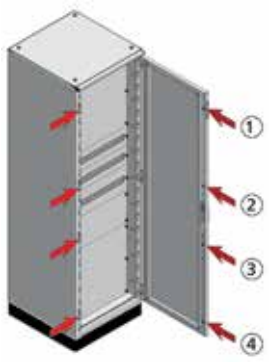

Reliable locking system

Locking system enables the door to be fixed to the framework at four different points.

Easy electrical assembly with mutual mounting accessories

Thanks to robust framework and internal mounting accessories; door, back and side panel fixing is carried out after electrical assembly. Internal mounting accessories are designed to be used in all E-Kabin series.

Door with ventilation modules

Ventilation module option for high-capacity natural ventilation.

Hangable side cover design to framework

The feature of back and side covers can be hung on the framework, which provides easy assembly

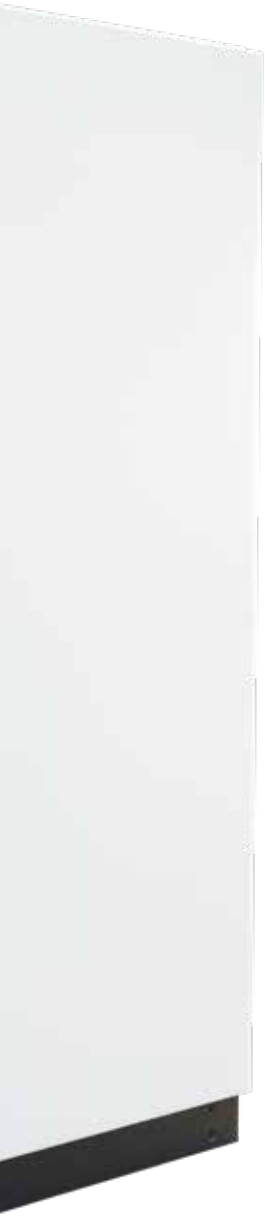

Polyurethane sealing gasket

Foam-in-place gasket applied to door does not loose its elasticity in time and provides protection against dust and water.

IP40 Modular bottom plate arrangement

Bottom plate arrangement complying with IP40 protection degree provides comfort with possibility of sliding piecess. Bottom plates can be equipped with different brushes which are supplied as accessories.

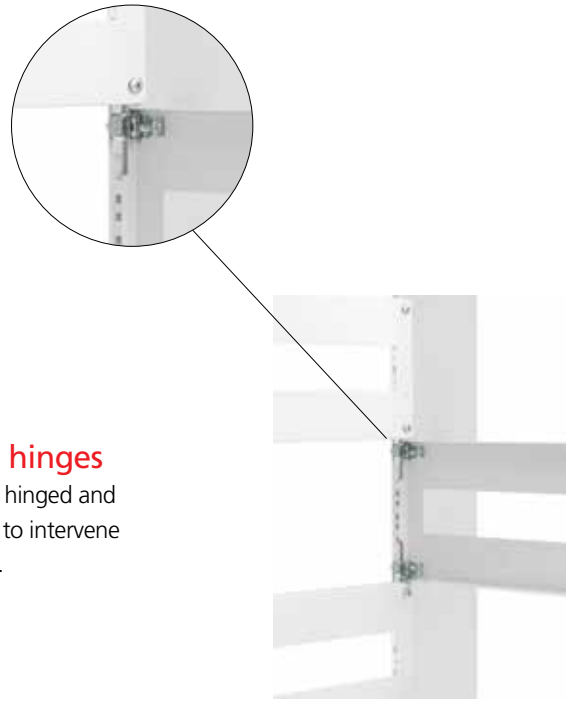

Front cover plates with hinges

Cover Plates are manufactured as hinged and openable. So, it provides easy job to intervene without removing the cover plate.

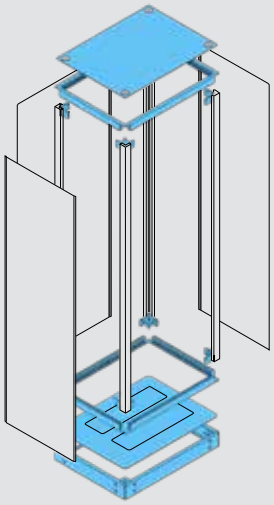

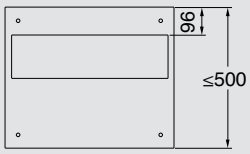

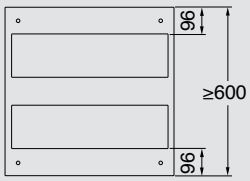

Unless otherwise specified, all dimensions are in mm.

Module Set - EL MS

Supply contents include horizontal rails, top cover and bottom plate.

Material : Galvanized steel sheet
Surface : RAL 7035 (Grey Colour), Plinth RAL 9005 (Black Colour)
Content : 4 pieces of Horizontal rails (for width)
4 pieces of Horizontal rails (for depth)
1 piece of Top cover
1 piece of Top cover fittings pack
1 piece of Plinth set
1 piece of Plinth set fittings pack
1 set of Corner connection kit (8 pieces of Corner connection plates and fasteners)
1 piece of Bottom cover
Bottom cover gland plate (see table for quantity)

Available Series: EL

Note: If the protection class of L series are required to be IP55, EL MS IP55 set must also be added to the order. See page 200

Module set

Enclosure Rated Width	Enclosure Rated Depth	Order Codes
400	400	EL MS 0404
	500	EL MS 0405
	600	EL MS 0406
	700	EL MS 0407
	800	EL MS 0408
500	400	EL MS 0504
	500	EL MS 0505
	600	EL MS 0506
	700	EL MS 0507
	800	EL MS 0508
600	400	EL MS 0604
	500	EL MS 0605
	600	EL MS 0606
	700	EL MS 0607
	800	EL MS 0608
700	400	EL MS 0704
	500	EL MS 0705
	600	EL MS 0706
	700	EL MS 0707
	800	EL MS 0708
800	400	EL MS 0804
	500	EL MS 0805
	600	EL MS 0806
	700	EL MS 0807
	800	EL MS 0808

Module sets for Enclosures with overlapping door

Enclosure Rated Width	Enclosure Rated Depth	Order Codes
1000	400	EL MS 5504
	500	EL MS 5505
	600	EL MS 5506
	700	EL MS 5507
	800	EL MS 5508
1200	400	EL MS 6604
	500	EL MS 6605
	600	EL MS 6606
	700	EL MS 6607
	800	EL MS 6608

Gland plate

Enclosure Rated Width	Enclosure Rated Depth	Gland Plate Content	
		RP 40	RP 60
300	400-500-600 700-800	-	-
400-500	400-500	1	-
	600-700-800	2	-
600-700	400-500	-	1
	600-700-800	-	2
800	400-500	2	-
	600-700-800	4	-
1000	400-500	2	-
	600-700-800	4	-
1200	400-500	-	2
	600-700-800	-	4

Uprights Set - EL DP

EL DP is used vertical wise to assemble the enclosure framework.

Material : Galvanized steel sheet
Surface : Galvanized, Not Painted
Content : 4 pieces of uprights

Applicable Series EL

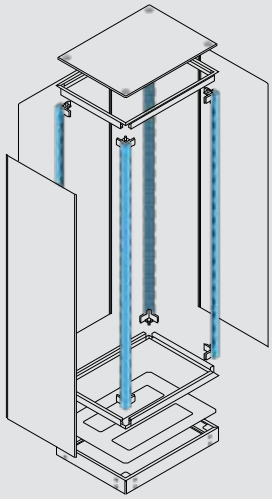

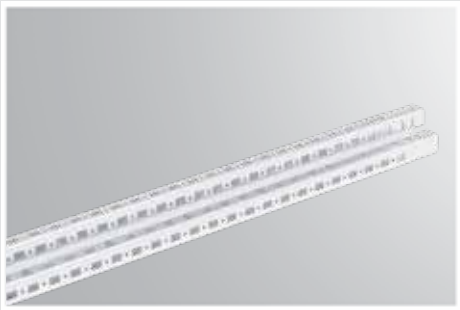

Uprights set

Enclosure Rated Height	Order Code
1800	EL DP 18
2000	EL DP 20
2200	EL DP 22

Unless otherwise specified, all dimensions are in mm.

Front Door and Rear Fixed Panel Set - EL OA

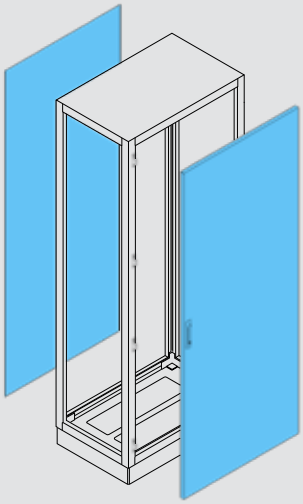

Material : Galvanized steel sheet
Surface : Painted, RAL 7035 (Grey Colour)
Content : 1 piece of Front door
1 piece of Rear fixed panel
(There are 2 pieces of rear fixed panels and 1 piece vertical inner profile in the pack for enclosures having overlapping doors)
1 piece of Lock
1 piece of Front door connection set
1 piece of Rear fixed panel connection set

Applicable Series: EL

Note: If the protection class of L series are required to be IP55, EL OA IP55 set must also be added to the order. See page 201

Front door and rear fixed panel set

Enclosure Rated Height	Enclosure Rated Width	Order Code
1800	400	EL OA 1804
	500	EL OA 1805
	600	EL OA 1806
	700	EL OA 1807
	800	EL OA 1808
	500+500	EL OA 1855
	600+600	EL OA 1866
2000	400	EL OA 2004
	500	EL OA 2005
	600	EL OA 2006
	700	EL OA 2007
	800	EL OA 2008
	500+500	EL OA 2055
	600+600	EL OA 2066
2200	400	EL OA 2204
	500	EL OA 2205
	600	EL OA 2206
	700	EL OA 2207
	800	EL OA 2208
	500+500	EL OA 2255
	600+600	EL OA 2266

Note: Overlapping doors are shipped with 2 rear covers and 1 vertical inner profile.

MA Mounting rails suitable for inner side of doors

Front Door Width	Length L	Code
50 cm	34,5 cm	EG MA 0350
60 cm	44,5 cm	EG MA 0450
70 cm	54,5 cm	EG MA 0550
80 cm	64,5 cm	EG MA 0650

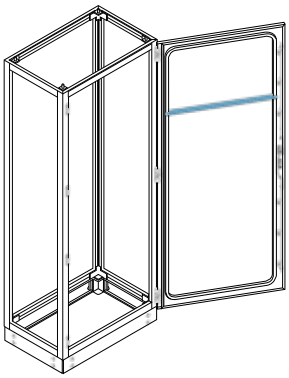

Unless otherwise specified, all dimensions are in mm.

Side Fixed Panel Set - EL YS

It is used to close sides of enclosures. The design of the rear and side fixed panels are the same.

Material : Galvanized steel sheet
Surface : Painted, RAL 7035 (Grey Colour)
Content : 2 pieces of Fixed panels
2 pieces of Fittings set

Applicable Series EL

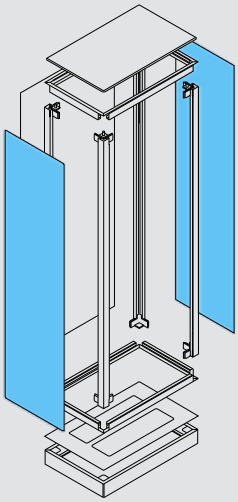

Note: If the protection class of L series are required to be IP55, EL YS IP55 set must also be added to the order. See page 201

YS Side fixed panel set

Enclosure Rated Height	Enclosure Rated Depth	Order Code
1800	400	EL YS 1804
	500	EL YS 1805
	600	EL YS 1806
	700	EL YS 1807
	800	EL YS 1808
2000	400	EL YS 2004
	500	EL YS 2005
	600	EL YS 2006
	700	EL YS 2007
	800	EL YS 2008
2200	400	EL YS 2204
	500	EL YS 2205
	600	EL YS 2206
	700	EL YS 2207
	800	EL YS 2208

Unless otherwise specified, all dimensions are in mm.

Mounting Plate

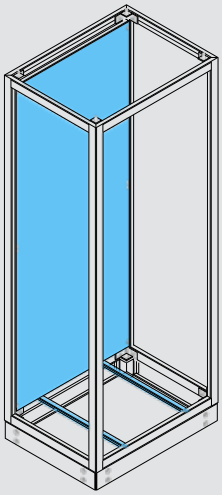

Full Height Mounting Plate - EG MK

It is designed for general usage.

Material : Galvanized steel sheet
Content : 1 piece of Full height mounting plate
2 pieces of Depth rails
1 piece of Fittings set

Applicable Series: EL ES ED HS XS

Full height mounting plate

Enclosure Rated Height	Enclosure Rated Width	Enclosure Rated Depth	Steel Sheet Thickness
HH	WW	DD	TXX
12*	04	04	T15
14*	05	05	T20
16*	06	06	T30
18	07	07	
20	08	08	
22	10		
	12		

* Only T20 type is available in these dimensions (HH=12,14,16).

Mounting plate information

TXX	Steel Sheet Thickness	Maximum Carriage Capacity	Surface Protection
T15	1,5 mm	300 kg	Without Folio
T20	2 mm	600 kg	With Folio
T30	3 mm	600 kg	Without Folio

Sample Coding: EG MK 20 08 05 T20

Dimension Information — Mounting Plate Information

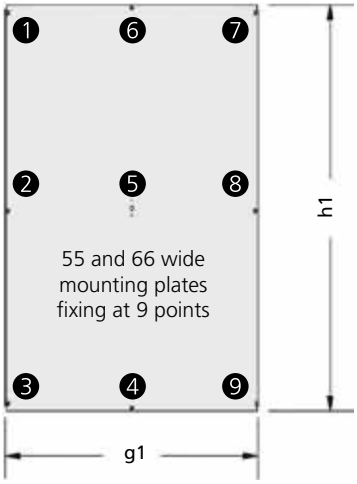

Height	Net Dimension h1	Width	Net Dimension g1
1800	1645 mm	400	346 mm
2000	1845 mm	500	446 mm
2200	2045 mm	600	546 mm
		700	646 mm
		800	746 mm
		1000	946 mm
		1200	1146 mm

Full height mounting plates can be fixed on rear uprights. If full height mounting plate is required to be adjustable through the depth, EG MKT Sliding rail accessories must be used. Sliding rail accessories must be ordered separately.

Full Height Mounting Plate Application Examples

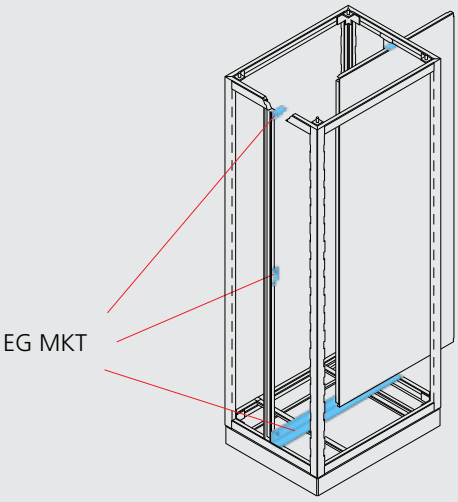

Adjustable Depth Application

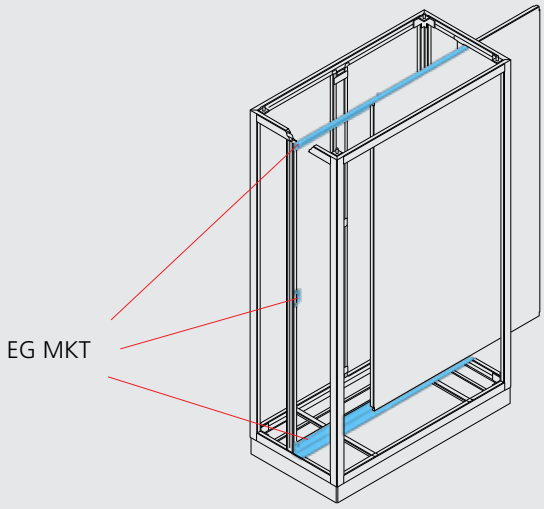

Adjustable Depth Application for ≥1000 mm Width

EG MKT page 150

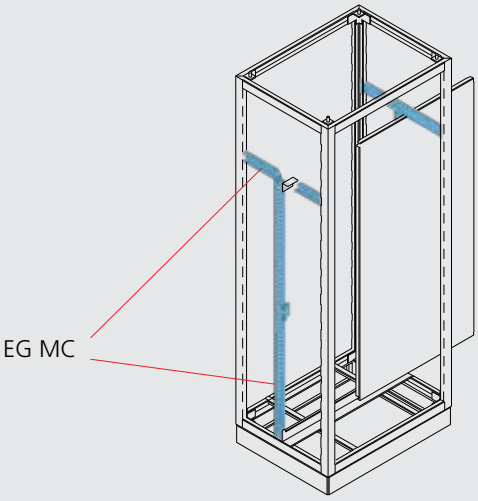

Short Height Application

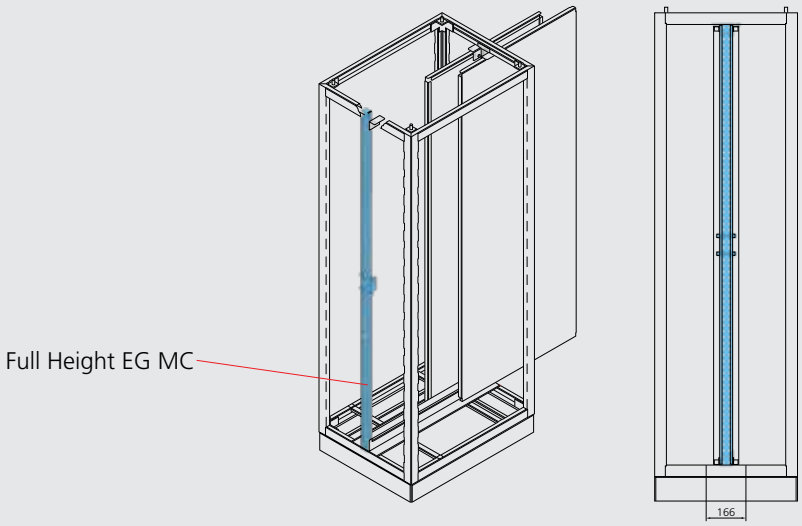

Back to Back Application

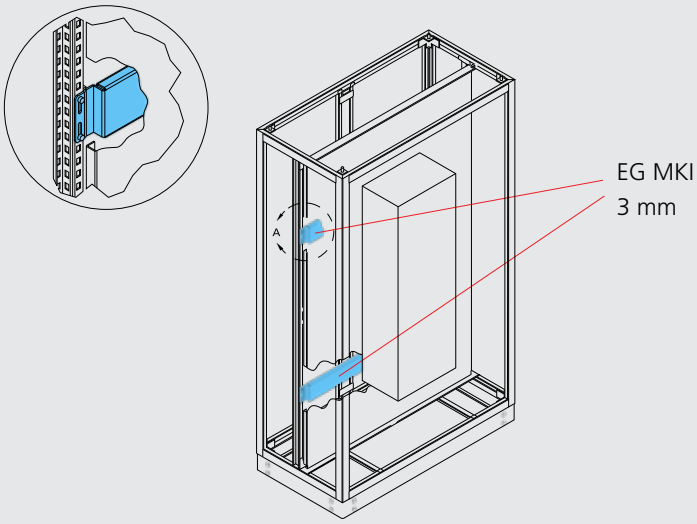

Inner Support Application

EG MKI page 151

Inner support rail EG MKI is providing additional strength for fixing heavy equipment on full height mounting plates. Full height mounting plate is fixed after EG MKI is positioned and fixed, so that it's rear surface rests on EG MKI's front surface.

Dimensions

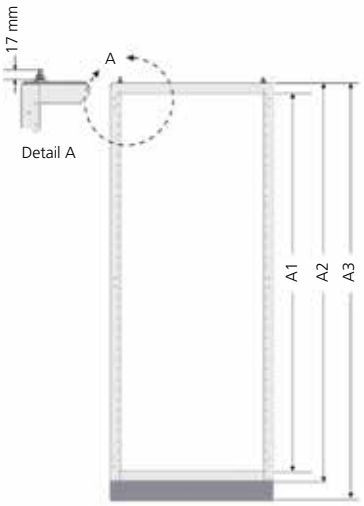

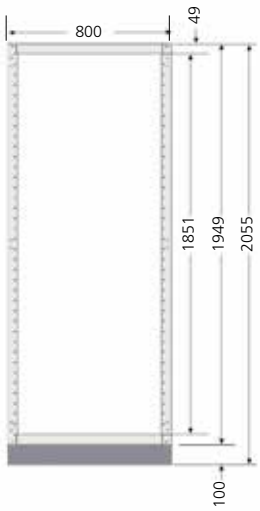

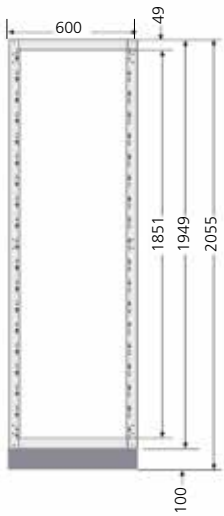

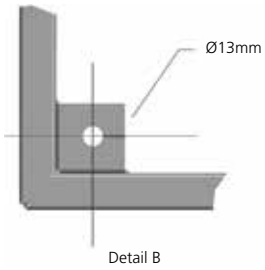

Net Dimensions	Enclosure Rated Height		
	1800	2000	2200
A1	1651 mm	1851 mm	2051 mm
A2	1749 mm	1949 mm	2149 mm
A3	1855 mm	2055 mm	2255 mm

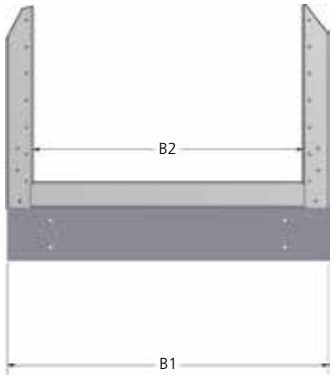

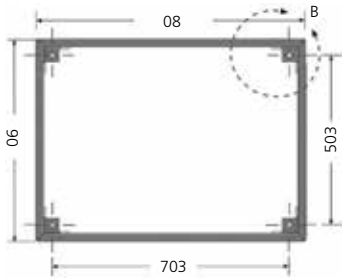

Net Dimensions	Enclosure Rated Width or Depth				
	400	500	600	700	800
B1	396 mm	496 mm	596 mm	696 mm	796 mm
B2	301 mm	401 mm	501 mm	601 mm	701 mm
B3	303 mm	403 mm	503 mm	603 mm	703 mm

Front door usage area height dimensions (A4)

Dimension / A4	EL front door
Net Dimension	1805 mm

Front door usage area width dimensions (B4)

Dimension / B4	300	400	500	600	700	800
Net Dimension	140 mm	240 mm	340 mm	440 mm	540 mm	640 mm

Example: 800 mm width

FLOOR-STANDING ENCLOSURES

HS SERIES
Outdoor- Modular

E-Kabin HS Series
Outdoor Electrical Enclosures

E-Kabin HS Series floor-standing electrical enclosures are designed as general purpose electrical equipment enclosures for outdoor applications. Depending on the door selection they can provide IP 55 or IP 41 protection degree. Their structure is modular, which enables expansion by combining side by side. All parts that come into contact with external enviroment are made of pre-galvanized sheet steel and coated first with primer paint then with electrostatic powder paint.

Type of Mounting	: Floor-Standing
Modularity	: Modular
Place of use	: Outdoor
Protection Class	: IP55, IP41 depending on front door type
Paint	: High corrosion resistant paint according to ISO 12944-2
Colour	: Painted, Standard RAL 7035 (Grey Colour)
Environmental Class	: According to EN 60721 - 3 - 3 IE37
Standards	: IEC 61439-1 IEC 62208 IEC 60529 IEC 62262

Features

Modular design - side-by-side expandability

Thanks to modular design of framework and canopy, expanding side by side is possible to form large combinations.

Moreover;

- Rear and front door usage
- It is possible to change the door opening direction.

Common interior accessories

Most of E-Kabin interior accessories such as mounting rails, mounting plates, cover plates etc. are designed to be suitable for use in all E-Kabin enclosures.

Under canopy fan unit

"Under Canopy Fan Unit" is accesable from inside the enclosure for easy service and maintenance.

Lifting kit

The lifting kit is placed on the top of the canopy as standard. By the lifting kit, it is available to lift up and carry the fully loaded enclosure safely and easily.

Stackable plinth

Thanks to its modular plinth structure, plints can be mounted on top of each other to increase the enclosure height.

Stainless-steel lock accessory

Standard swinghandle lock made of metal with high chemical resistance can be replaced with optionally selectable AISI 316 grade stainless-steel lock if required.

Order Codes

HS outdoor free standing enclosures are manufactured in the dimensions given below. Please consult your Customer Represantative for order information.

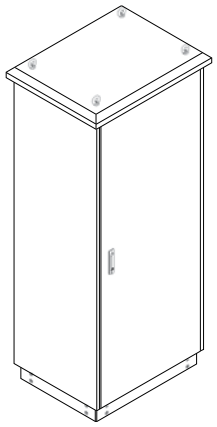

Enclosure Rated Height (A)	Enclosure Rated Width (B)	Enclosure Rated Depth (C)
1800	600	600
2000	700	700
2200	800	800
	1000	
	1200	

Dimensions

Enclosure Rated Height (A)	A Dimension Body Height	B Dimension External Height (A+180mm)
18-1800	1750	1930
20-2000	1950	2130
22-2200	2150	2330

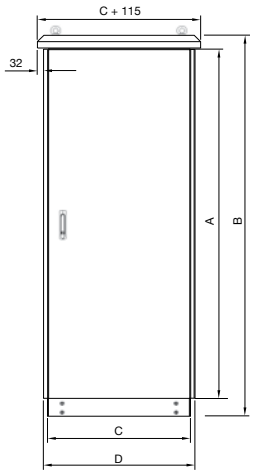

Enclosure Rated Width	C Dimensiom Body Width	D Dimension Enclosure Width Side Panels Included (C+50 mm)
04-400 mm	400	450
05-500 mm	500	550
06-600 mm	600	650
08-800 mm	800	850
10-1000 mm	1000	1050
12-1200 mm	1200	1250

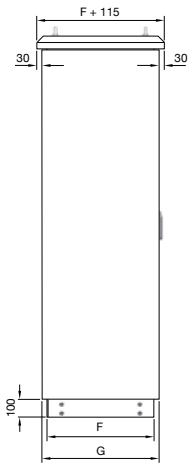

Enclosure Rated Depth	F Dimension Body Depth	G Dimension Enclosure Depth Front and Rear Panels Included
04-400 mm	400	455
05-500 mm	500	555
06-600 mm	600	655
08-800 mm	800	855

Unless otherwise specified, all dimensions are in mm.

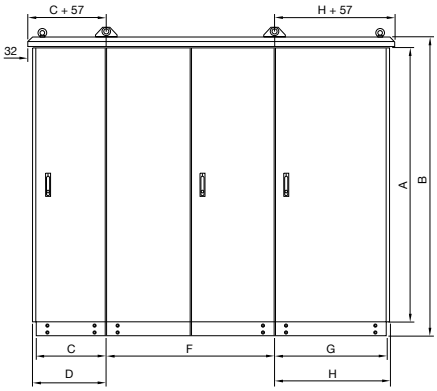

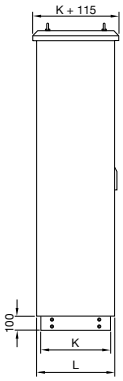

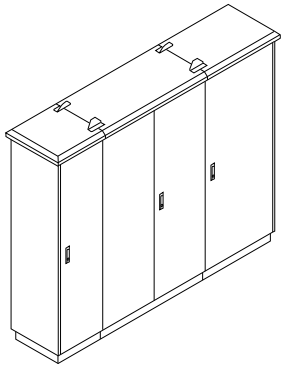

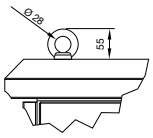

Side Enclosure

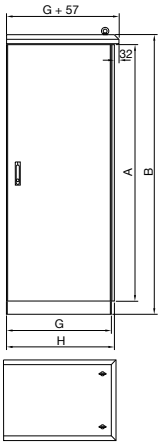

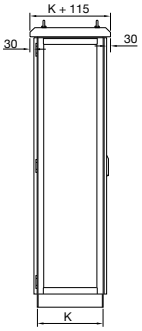

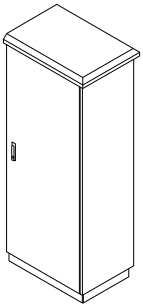

Middle Enclosure

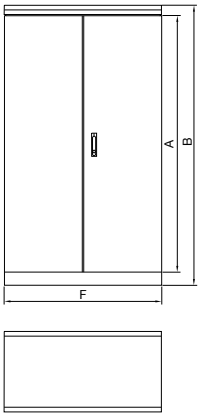

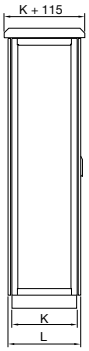

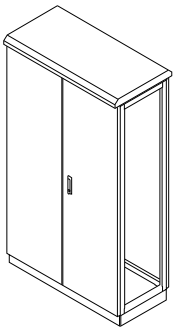

Enclosure Rated Height	A Dimension Body Height	B Dimension External Height (A+180 mm)
1800	600	600
2000	700	700
2200	800	800

Enclosure Rated Depth	K Dimension Body Depth	L Dimension Enclosure Depth Front and Rear Panels Included (K+55 mm)
04-400 mm	400	455
05-500 mm	500	555
06-600 mm	600	655
08-800 mm	800	855

Enclosure Rated Width	C Dimension Body Width	D Dimension Enclosure Width Side Panels are included(C+25 mm)	F Dimension Body Width	G Dimension Body Width	H Dimension Enclosure Width Side Panels Included(W+25 mm)
04-400 mm	400	425	400	400	425
05-500 mm	500	525	500	500	525
06-600 mm	600	625	600	600	625
08-800 mm	800	825	800	800	825
10-1000 mm	1000	1025	1000	1000	1025
12-1200 mm	1200	1225	1200	1200	1225

Unless otherwise specified, all dimensions are in mm.

FLOOR-STANDING ENCLOSURES

HF SERIES
Outdoor- Monoblock

E-Kabin HF Series
Outdor Electrical Enclosures

E-Kabin HF Series floor-standing electrical enclosures are designed as general purpose electrical equipment enclosures for outdoor applications. They have monoblock body structure and provide IP66 protection degree. All parts that come into contact with external enviroment are made of pre-galvanized sheet steel and coated first with primer paint then with electrostatic powder paint.

Type of Mounting	: Floor-Standing
Modularity	: Monoblock
Place of use	: Outdoor
Protection Class	: IP 66
Paint	: According to ISO 12944-2 high corrosion resistant paint
Colour	: Standard RAL 7035 (Grey Colour)
Environment class	: IE37 according to EN 60721 - 3 - 3
Standards	: IEC 61439-1 IEC 62208 IEC 60529 IEC 62262

Features

Polyurethane sealing gasket

Foam-in-place gasket behind the door does not lose its elasticity in time and provides protection against dust and water

Common interior accessories

Most of E-Kabin interior accessories such as mounting rails, mounting plates, cover plates etc. are designed to be suitable for use in all E-Kabin enclosures.

Stainless-steel lock accessory

Standard swinghandle lock made of metal with high chemical resistance can be replaced with optionally selectable AISI 316 grade stainless-steel lock if required.

Lifting kit

The lifting kit is placed on the top of the canopy as standard. By the lifting kit, it is available to lift up and carry the fully loaded enclosure safely and easily.

Stackable plinth

Thanks to its modular plinth structure, plints can be mounted on top of each other to increase the enclosure height.

Under canopy fan unit

"Under Canopy Fan Unit" is accesable from inside the enclosure for easy service and maintenance.

Order Codes

Enclosure Rated Height	Enclosure Rated Width (mm)	Enclosure Rated Depth (C)	Order Codes
16	600	05	HF 16 06 05
	800	05	HF 16 08 05
20	600	05	HF 20 06 05
	800	05	HF 20 08 05

Note: Mounting plate is not included in standard supply content, must be ordered seperately.

Note: Please consult your Customer Represantative for interior mounting accessories that can be selected for specific applications.

Dimensions

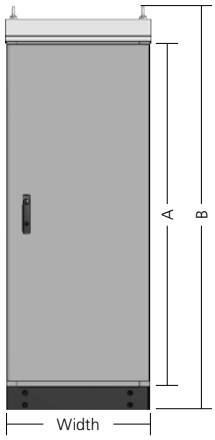

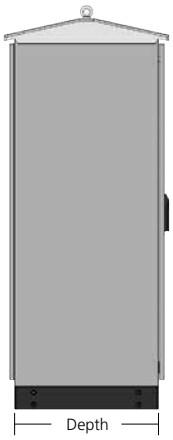

Height	Width	Depth
20	05-500 mm	05 - 500 mm
16	07-700 mm	-

Enclosure Rated Height	A Dimension Body Height	B Dimension Outer Height (Height with lifting kit)
20	1950	2185
16	1550	1785

Unless otherwise specified, all dimensions are in mm.

Full Height Mounting Plate - HF MK

It is designed for general use.

Material : 2 mm Galvanized steel sheet

Content : 1 piece of Full height mounting plate
1 piece of Lower support rail
2 pieces of Right-left upper fixings
1 piece of Fittings set

Applicable Series HF

Full height mounting plate

Enclosure Rated Height	Enclosure Rated Width	Order Code
1600	600	HF MK 1606
	800	HF MK 1608
2000	600	HF MK 2006
	800	HF MK 2008

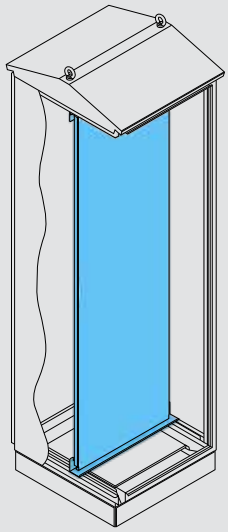

FLOOR-STANDING ENCLOSURES

XS SERIES
Stainless-Steel - Modular

E-Kabin XS Series
Stainless-Steel Electrical Enclosures

E-Kabin XS Series stainless-steel, floor standing enclosures are designed as general purpose electrical equipment enclosures for industrial applications. They are suitable for indoor applications and have modular structure, which enables expansion by combining side by side. They provide IP 55 protection degree. Standard production does not include painting process. However, custom-made production, varnished or painted in the desired RAL code is possible.

XS Series stainless-steel enclosures can be produced with AISI 304 or 316 grade raw material. In standard swinghandle lock made of metal with high chemical resistance is used in XS Series. Optionally, locking system made of 304 or 316 grade stainless-steel can also be selected.

All E-Kabin interior accessories are designed to be suitable for use in stainless-steel enclosures as well.

While keeping standard product design unchanged, size modification, material thickness modification and cut-outs can be applied if requested.

Type of Mounting	: Floor-Standing
Modularity	: Modular
Application	: Indoor
Protection Class	: IP55
Environmental Class	: According to EN 60721 - 3 - 3 IE33
Standards	: IEC 61439-1 IEC 62208 IEC 60529 IEC 62262
Material	: AISI 304 grade stainless-steel - standard AISI 316 grade stainless-steel - optional

Features

Stackable plinth

Thanks to its modular plinth structure, plints can be mounted on top of each other to increase the enclosure height.

Clean surface pattern

In production of stainless-steel enclosures, stud welding process is applied in a way that it does not leave any traces visible from outside the door. Thus, clean and smooth surface appearance has been provided for welded surfaces.

Common interior accessories

Most of E-Kabin interior accessories such as mounting rails, mounting plates, cover plates etc. are designed to be suitable for use in stainless-steel enclosures.

Possibility of custom-made cut-outs

Custom-made cut-out processing on the door and body is applicable.

Polyurethane sealing gasket

Foam-in-place gasket behind the door does not lose its elasticity in time and provides protection against dust and water

Stainless-steel lock accessory

Standard swinghandle lock made of metal with high chemical resistance can be replaced with optionally selectable AISI 316 grade stainless-steel lock if required.

Possibility of custom size production

Non-standard, custom size manufacturing is possible.

* Please consult your Customer Represantative for more information.

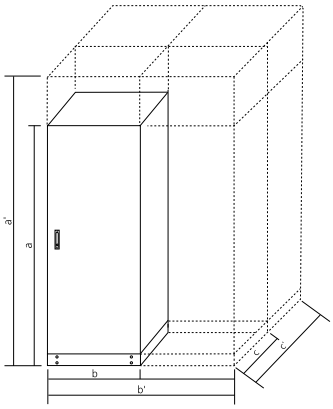

a'= a+n.200 mm
b'= b+n.100 mm
c'= c+n.100 mm

Robust hidden hinge

As standard 3 pcs. door hinge which is 3mm thick and AISI 316 grade stainless-steel, is designed in such a way that it is not visible from outside of the door. Thanks to this hinge the door can be opened up to 130°.

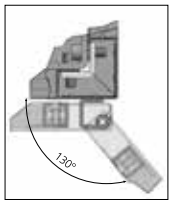

Order Codes

XS Stainless-Steel floor standing enclosures are manufactured in the dimensions given below.
Please consult your Customer Represantative for order information.

Enclosure Rated Height	Enclosure Rated Width	Enclosure Rated Depth
1400	400	400
1600	500	500
1800	600	600
2000	700	700
2200	800	800

304/316

AISI 304 grade stainless-steel is used.
Optionally, AISI 316 grade stainless-steel is available

LOCK

The lock system made of AISI 316 grade stainless-steel can be selected instead of the pendulum arm lock system with high chemical resistance used as a standard.

COMMON INTERIOR ACCESSORIES

Most of E-Kabin interior accessories such as mounting rails, mounting plates, cover plates etc. are designed to be suitable for use in stainless-steel enclosures.

SEMI-CUSTOM DESIGN

While keeping standard product design unchanged, size modification, material thickness modification and cut-outs can be applied if requested.

PAINT

Custom-made coating, varnished or painted in the desired RAL code is possible.

Dimensions

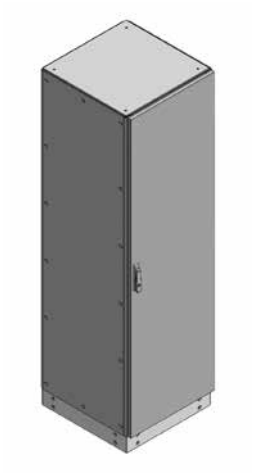

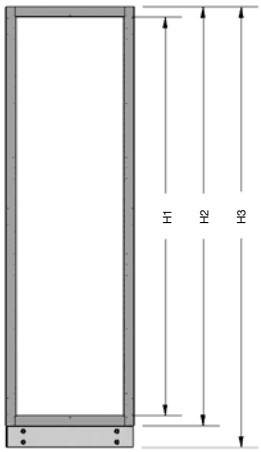

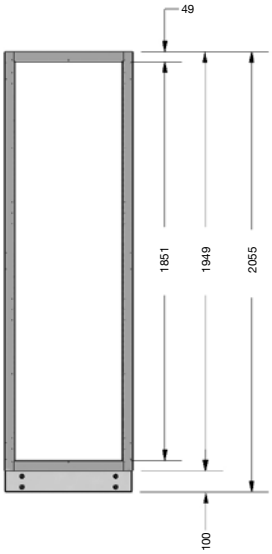

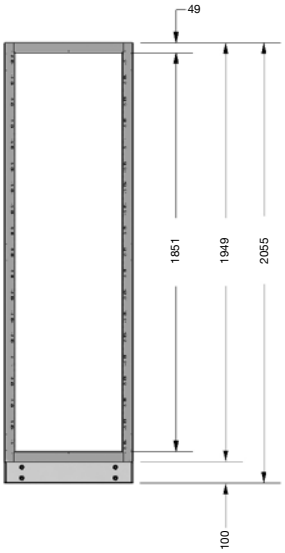

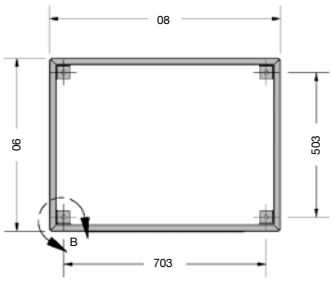

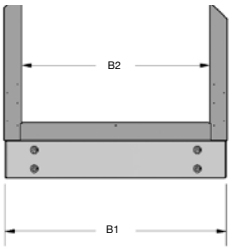

Net Dimensions	Enclosure rated height		
	1800	2000	2200
H1	1749 mm	1949 mm	2149 mm
H2	1651 mm	1851 mm	2051 mm
H3	1855 mm	2055 mm	2255 mm

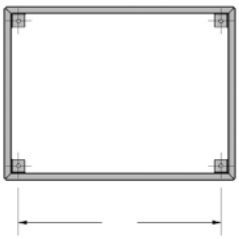

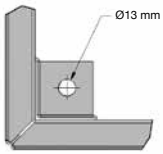

Net Dimensions	Enclosure Rated Width or Depth				
	400	500	600	700	800
B1	396 mm	496 mm	596 mm	696 mm	796 mm
B2	301 mm	401 mm	501 mm	601 mm	701 mm
B3	303 mm	403 mm	503 mm	603 mm	703 mm

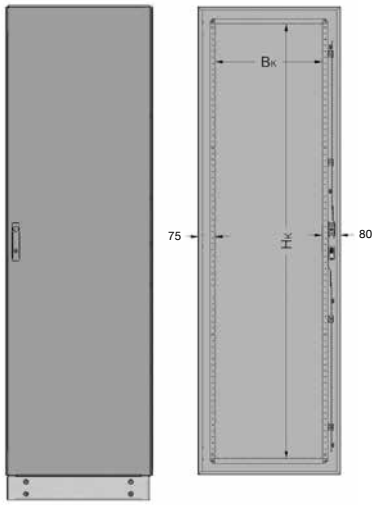

Front Door Usage Area Height Dimensions (H_K)			
Dimensions / H_K	ES OK 18	ES OK 20	ES OK 22
Net Dimensions	1610 mm	1810 mm	2010 mm

Front Door Usable Area Width Dimensions (U_K)						
Dimensions / B_K	300	400	500	600	700	800
Net Dimensions	145 mm	245 mm	345 mm	445 mm	545 mm	645 mm

FLOOR-STANDING ENCLOSURES

XH SERIES
Stainless-Steel - Monoblock

E-Kabin XH Series
Stainless-Steel Electrical Enclosures

E-Kabin XH Series stainless-steel, floor standing enclosures are designed as general purpose electrical equipment enclosures for outdoor applications. Their structure is modular, which enables expansion by combining side by side. They provide IP 55 protection degree. Standard production does not include painting process. However, custom-made production, varnished or painted in the desired RAL code is possible.

XS Series stainless-steel enclosures can be produced with AISI 304 or 316 grade raw material. Standard swinghandle lock is made of 316 grade stainless-steel.

All E-Kabin interior accessories are designed to be suitable for use in stainless-steel enclosures as well.

While keeping standard product design unchanged, size modification, material thickness modification and cut-outs can be applied if requested.

Type of Mounting	: Floor-Standing
Modularity	: Modular
Application	: Outdoor
Protection Class	: IP55
Environmental Class	: According to EN 60721 - 3 - 3 IE37
Standards	: IEC 61439-1 IEC 62208 IEC 60529 IEC 62262
Material	: AISI 304 grade stainless-steel - standard AISI 316 grade stainless-steel - optional
Lock set	: Stainless-steel - standard

Features

Clean surface pattern

In production of stainless-steel enclosures, stud welding process is applied in a way that it does not leave any traces visible from outside the door. Thus, clean and smooth surface appearance has been provided for welded surfaces.

Common interior accessories

Most of E-Kabin interior accessories such as mounting rails, mounting plates, cover plates etc. are designed to be suitable for use in stainless-steel enclosures.

Under canopy fan unit

"Under Canopy Fan Unit" is accesable from inside the enclosure for easy service and maintenance.

Possibility of custom size production

Non-standard, custom size manufacturing is possible.

* Please consult your Customer Represantative for more information.

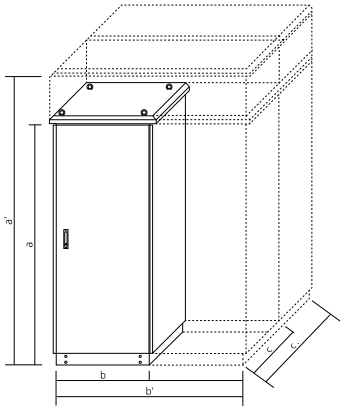

a'= a+n.200 mm
b'= b+n.100 mm
c'= c+n.100 mm

Modular design - side-by-side expandability

Thanks to its modular structure, it is possible to assemble and expand it side by side for multiple combinations.

Moreover;

- Rear and front door use
- It is possible to change the door opening direction.

Optional lifting kit

Optional lifting kit enable fully loaded enclosure to be lifted up and carried for installation purposes.

Polyurethane sealing gasket

Foam-in-place gasket behind the door does not lose its elasticity in time and provides protection against dust and water.

Stainless-steel lock

Lock system made of AISI 316 grade stainless-steel is included in the standard order content.

Order Codes

XH Stainless-Steel floor standing enclosures are manufactured in the dimensions given below.
Please consult your Customer Represantative for order information.

Enclosure Rated Height	Enclosure Rated Width	Enclosure Rated Depth
1400	400	400
1600	500	500
1800	600	600
2000	700	700
2200	800	800

Dimensions

Enclosure Rated Height	A Dimension Body Height	B Dimension Outer Height (A+180mm)
14-1400 mm	1350	1530
16-1600 mm	1550	1730
18-1800 mm	1750	1930
20-2000 mm	1950	2130
22-2200 mm	2150	2330

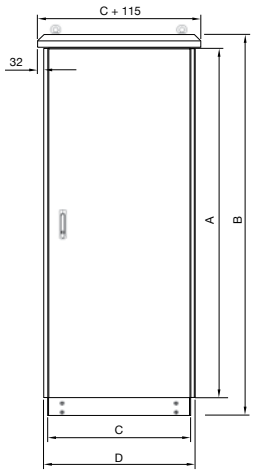

Enclosure Rated Width	C Dimension Body Width	D Dimension Enclosure Width Including Side Panel (C+50 mm)
04-400 mm	400	450
05-500 mm	500	550
06-600 mm	600	650
08-800 mm	800	850
10-1000 mm	1000	1050
12-1200 mm	1200	1250

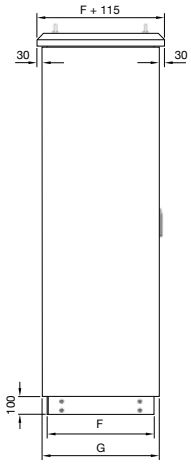

Enclosure Rated Depth	F Dimension Body Depth	G Dimension Enclosure Width Including Front Door-Rear Panel (C+50 mm)
04-400 mm	400	455
05-500 mm	500	555
06-600 mm	600	655
08-800 mm	800	855

Unless otherwise specified, all dimensions are in mm.

Dimensions

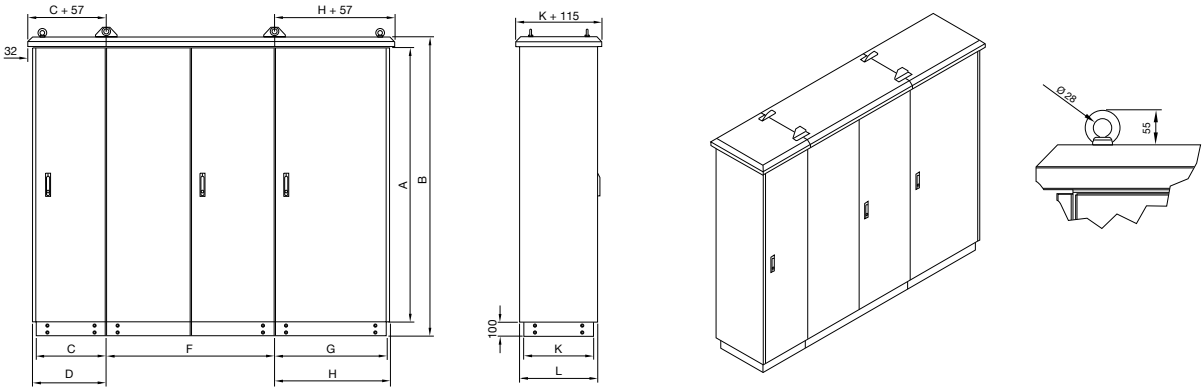

Side Enclosure

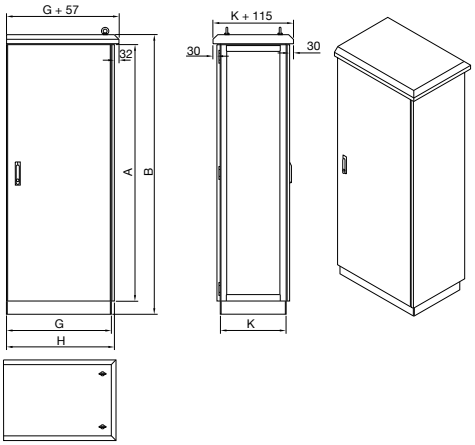

Front Enclosure

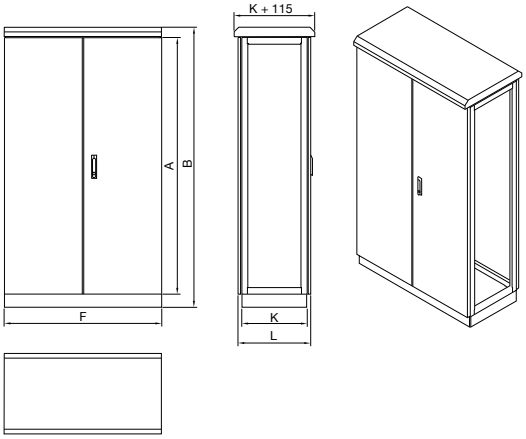

Enclosure Rated Height	A Dimension Body Height	B Dimension Outer Height (A+180mm)
14-1400	1350	1530
16-1600	1550	1730
18-1800	1750	1930
20-2000	1950	2130
22-2200	2150	2330

Enclosure Rated Depth	K Dimension Body Depth	L Dimension Enclosure Depth Front - Back Cover Included (K+55 mm)
04-400 mm	400	455
05-500 mm	500	555
06-600 mm	600	655
08-800 mm	800	855

Enclosure Rated Width	C Dimension Body Width	D Dimension Enclosure Width Including Side Cover (C+25 mm)	F Dimension Body Width	G Dimension Body Widthi	H Dimension Enclosure Width Including Side Cover (W+25 mm)
04-400 mm	400	425	400	400	425
05-500 mm	500	525	500	500	525
06-600 mm	600	625	600	600	625
08-800 mm	800	825	800	800	825
10-1000 mm	1000	1025	1000	1000	1025
12-1200 mm	1200	1225	1200	1200	1225

Unless otherwise specified, all dimensions are in mm.

FLOOR-STANDING ENCLOSURES

Floor-Standing Enclosure Accessories

		Page
Full Height Mounting Plates and Accessories	Full Height Mounting Plates - EG MK	148
	Full Height Mounting Plate Upper-Lower Support Rail - EG MKT	150
	Full Height Mounting Plate Inner Support Rail - EG MKI	151
	Full Height Mounting Plate Infill Rail - EG MKA	151
Internal Mounting Accessories	Mounting Rail - EG MA	154
	Mounting Rail - EG MB	155
	Mounting Rail - EG MC	156
	Mounting Rail - EG ME	157
	Mounting Rail - EG MG	157
	Mounting Plate - EG MP	158
	Special Mounting Rail - EG SP	159
	Power Factor Compensation Mounting Plate - EG KSS	160
	Power Factor Compensation Mounting Plate (Deep Type) - EG KSD	161
	Aluminium Rail Set - EG RS	162
	Sheet Rail Set - EG RK	162
	MCCB Adjustable Mounting Plates - EG SY	163
	Adjustable Mounting Plate - EG RT	163
	Special Fixing Set - EG DST	164
	19 inch Swing Frame - EG MF	165
	Adapter Rail - HF AO	166
Front Cover Plates and Accessories	Front Cover Frame Set - HS OS	167
	Front Cover Frame Set - HF OS	167
	Full Height Cover Plate - EG OB	168
	Full Height Cover Plate - HS OB	169
	Cover Plate With Hinges - EG OM	170
	Front Cover Frame Set - EG OS	171
	Fixed Cover Plate - EG SO	172
	Cover Plate Standard Hinge Kit - EG OMT	173
	Cover Plate Seal Kit - EG OMM	174
	Cover Plate Screw Connection Kit - EG OMV	174
Ventilation Accessories	Ventilation Module - EG HM	175
	Roof Top Fan - EG FM	176
	Under-Canopy Ventilation Set - HS FR	177
	Fan-Filter Unit - EG FAN	178
	Filter Unit - EG FIL	178
	Spare Filter - EG FS	178
	Thermostat - EG ET	179
	Fan-Filter Unit With Thermostat - EG FAT	179
Base and Cable Entry Accessories	Plinth Set - EG BZ	180
	Plinth Set - XS BZ	181
	Bottom Gland Plate Set - ES BO	182
	Cable Attachment Rail - EG KTP	183
	Brush for Bottom Cable Entry - EG OF	183
	Bottom Plate Gasket Set - EG BOC	184
	Gland Plate With Brush - EG FR	184
Locks	XS KT 01 Stainless-Steel Swinghandle Lock - XS KT	185
	XS KT 02 Stainless-Steel Padlockable Swinghandle Lock - XS KT	185
	Espagnolette Lock - EG KT 01	186
	Epagnolette Lock (Padlockable Version) - EG KT 02	186
Enclosure Baying Accessories	Enclosure Baying Kit - EG PB 00	187
	Enclosure Baying Kit - EG PB 03	187
Document Pockets	Plastic Document Pocket - EG PC	188
	Metal Document Pocket - EG SC	188
Door Holders	Door Holder Set - HF KS	189
	Door Holder Set - EG DT	189
Lifting Accessories	Lifting Kit - EG AT 01	190
	Dual Lifting Kit - EG AT 02	190
	Ventilation Module Lifting Kit - EG HMT 01	191
	Ventilation Module Lifting Kit - EG HMT 02	191
Other Accessories	Spring Zamak Nut - EG CY	192
	Zamak Nut - EG CZ	192
	Earthing Set - EG SKT	192
	M5x8 mm Self-Tapping Screw - EG CK 5	193
	Snap-On Gasket - EG GC	193
	Interior Lighting Fixture - EG KL	194
	EG MB Fixing Set - EG MBT	194
	Busbar Riser Module - EG BY	195
	Bottom Incoming Busbar Module - EG BA	196
	ES front bar profile - ES OET	197
	Wall Fixing Set - ES DS	198
	Laptop Table - EG DB	198
	Corner Module - EG KM	199
	Corner Module Plinth Set - EG KB	199
	L series module set IP55 kit - EL MSI	200
	L Series Front and Rear IP55 Set - EL OAI	201
	L Series Side Cover IP55 Set - EL YSI	201
	Cable Module - EG CM	202
Power Distribution Accessorries	Power Distribution Accessorries	203

Mounting Plate

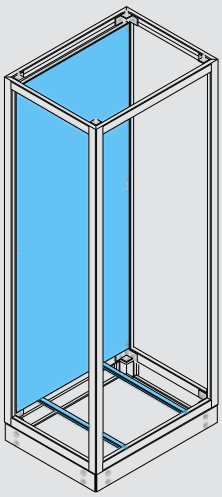

Full Height Mounting Plate - EG MK

It is designed for general usage.

Material : Galvanized steel sheet
Content : 1 piece of Full height mounting plate
2 pieces of Depth rails
1 piece of Fittings set

Applicable Series: EL ES ED HS XS

Full height mounting plate

Enclosure Rated Height	Enclosure Rated Width	Enclosure Rated Depth	Steel Sheet Thickness
HH	WW	DD	TXX
12*	04	04	T15
14*	05	05	T20
16*	06	06	T30
18	07	07	
20	08	08	
22	10		
	12		

* Only T20 type is available in these dimensions (HH=12,14,16).

Mounting plate information

TXX	Steel Sheet Thickness	Maximum Carriage Capacity	Surface Protection
T15	1,5 mm	300 kg	Without Folio
T20	2 mm	600 kg	With Folio
T30	3 mm	600 kg	Without Folio

Sample Coding: EG MK 20 08 05 T20

Dimension Information — Mounting Plate Information

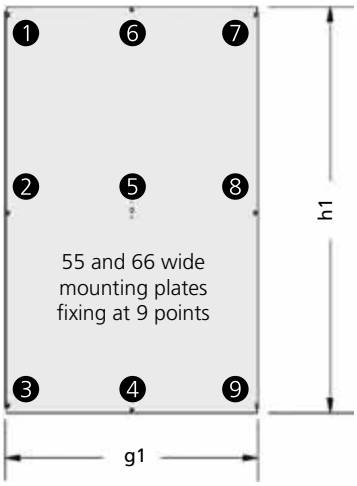

Height	Net Dimension h1	Width	Net Dimension g1
1800	1645 mm	400	346 mm
2000	1845 mm	500	446 mm
2200	2045 mm	600	546 mm
		700	646 mm
		800	746 mm
		1000	946 mm
		1200	1146 mm

Full height mounting plates can be fixed on rear uprights. If full height mounting plate is required to be adjustable through the depth, EG MKT Sliding rail accessories must be used. Sliding rail accessories must be ordered separately.

Full Height Mounting Plate Application Examples

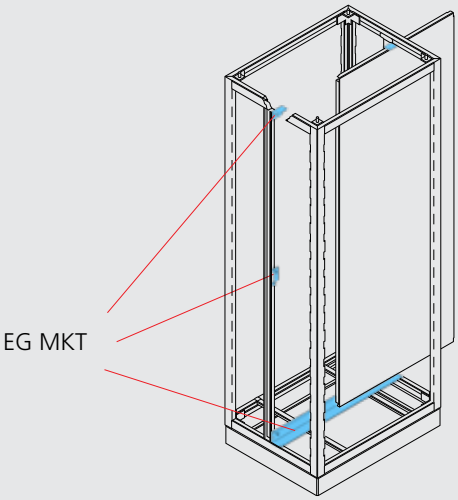

Adjustable Depth Application

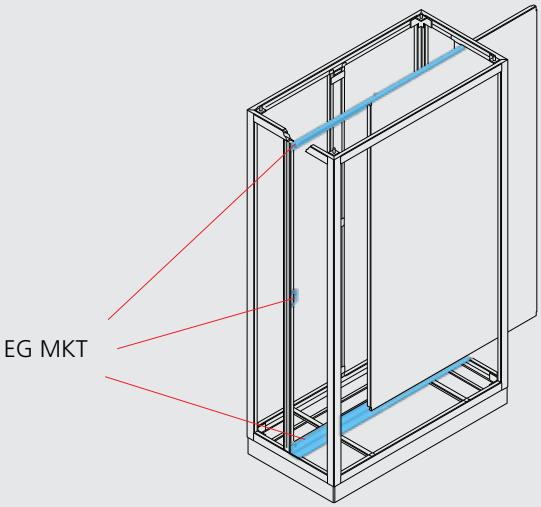

Adjustable Depth Application for ≥1000 mm Width

EG MKT page 150

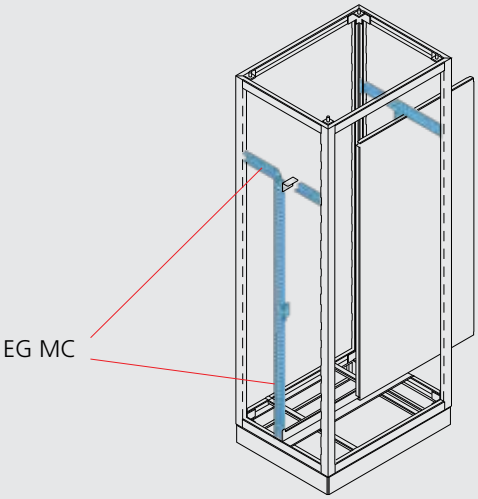

Short Height Application

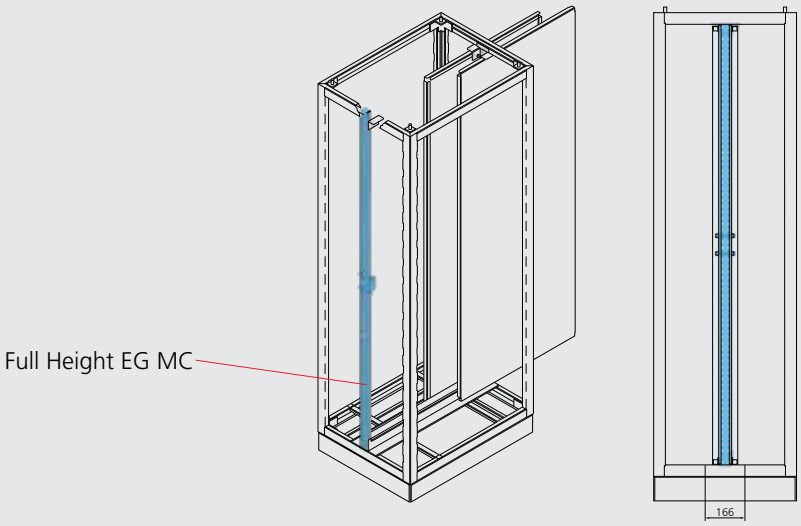

Back to Back Application

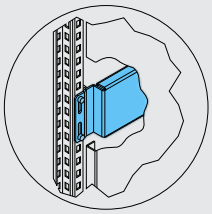

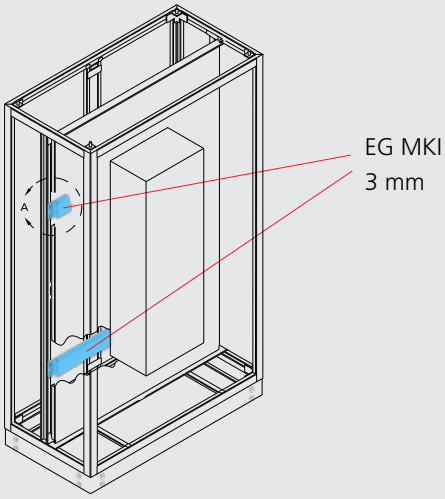

Inner Support Application

EG MKI page 151

Inner support rail EG MKI is providing additional strength for fixing heavy equipment on full height mounting plates. Full height mounting plate is fixed after EG MKI is positioned and fixed, so that it's rear surface rests on EG MKI's front surface.

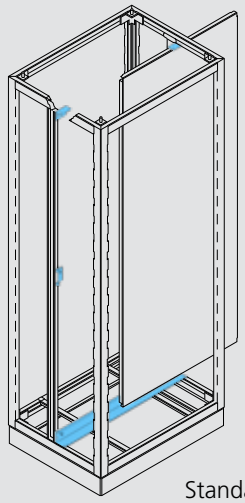

Standard Type

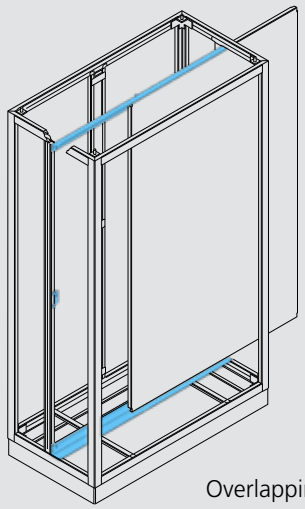

Overlapping Type

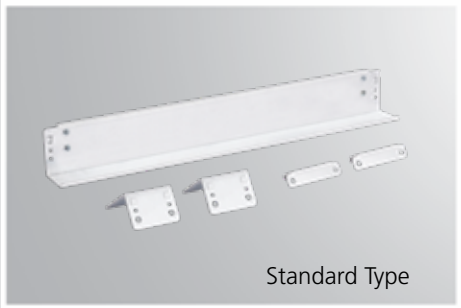

Standard Type

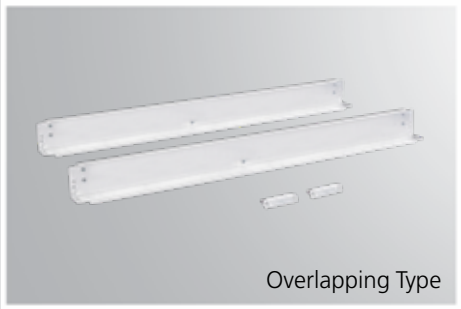

Overlapping Type

Unless otherwise specified, all dimensions are in mm.

Full Height Mounting Plate Lower-Upper Support Rail - EG MKT

Designed for situations where the full height mounting plate needs to be adjusted through the depth.

Material : Galvanized steel sheet
Surface : Galvanized
Content : 1 piece of Lower support rail
2 pieces of Right-left upper fixing brackets
2 pieces of Middle fixing brackets
1 piece of Fittings set
(At overlapping types, full-width rail is used instead of right-left upper fixing bracket)

Applicable Series: EL ES ED HS XS

Note: To mount full-height mounting plates vertically in the center, the EG MC must be ordered according to the enclosure frame's internal dimensions. See page 156

Full height mounting plate lower-upper support rail

Enclosure rated width	Order code
400	EG MKT 04
500	EG MKT 05
600	EG MKT 06
700	EG MKT 07
800	EG MKT 08
1000	EG MKT 10
1200	EG MKT 12

Full Height Mounting Plate Inner Support Rail - EG MKI

Designed as support rail in case of mounting heavy equipment on Full Height Mounting Plate to be positioned at inner side.

Material : 3mm Galvanized steel sheet
Surface : Galvanized
Content : 1 piece of Full height mounting plate inner support rail
1 piece of Fittings set

Applicable Series: EL ES ED HS XS

Full height mounting plate inner support rail

Enclosure Rated Width	Order code
800	EG MKI 08
1000	EG MKI 10
1200	EG MKI 12

Note: EG MKI can only be used when full height mounting plate is fixed with EG MKT.

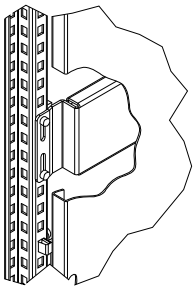

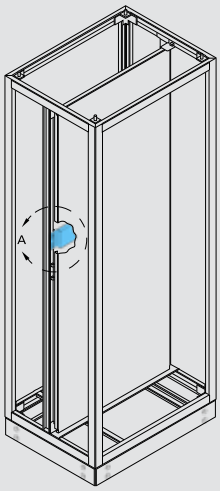

Full Height Mounting Plate Infill Rail - EG MKA

It provides a continuous plane as mounting surface when enclosures are bayed side by side by filling the gap between two full height mounting plates.

Material : Galvanized steel sheet
Surface : Galvanized
Content : 1 piece of MK full height infill rail
4 pieces of M5x8 self-tapping screws

Applicable Series: EL ES ED HS XS

Full height mounting plate infill rail

Enclosure rated height	Order Code
14	EG MKA 14
16	EG MKA 16
18	EG MKA 18
20	EG MKA 20
22	EG MKA 22

Note: If full height mounting plate has to be adjusted in depth MKT support rail must be used.

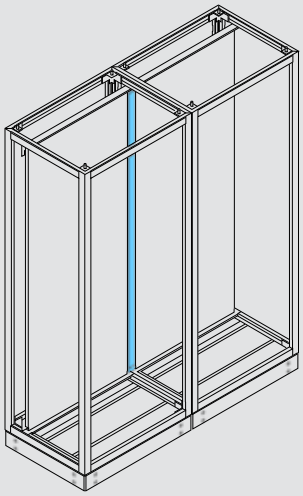

Unless otherwise specified, all dimensions are in mm.

Internal Mounting Accessories

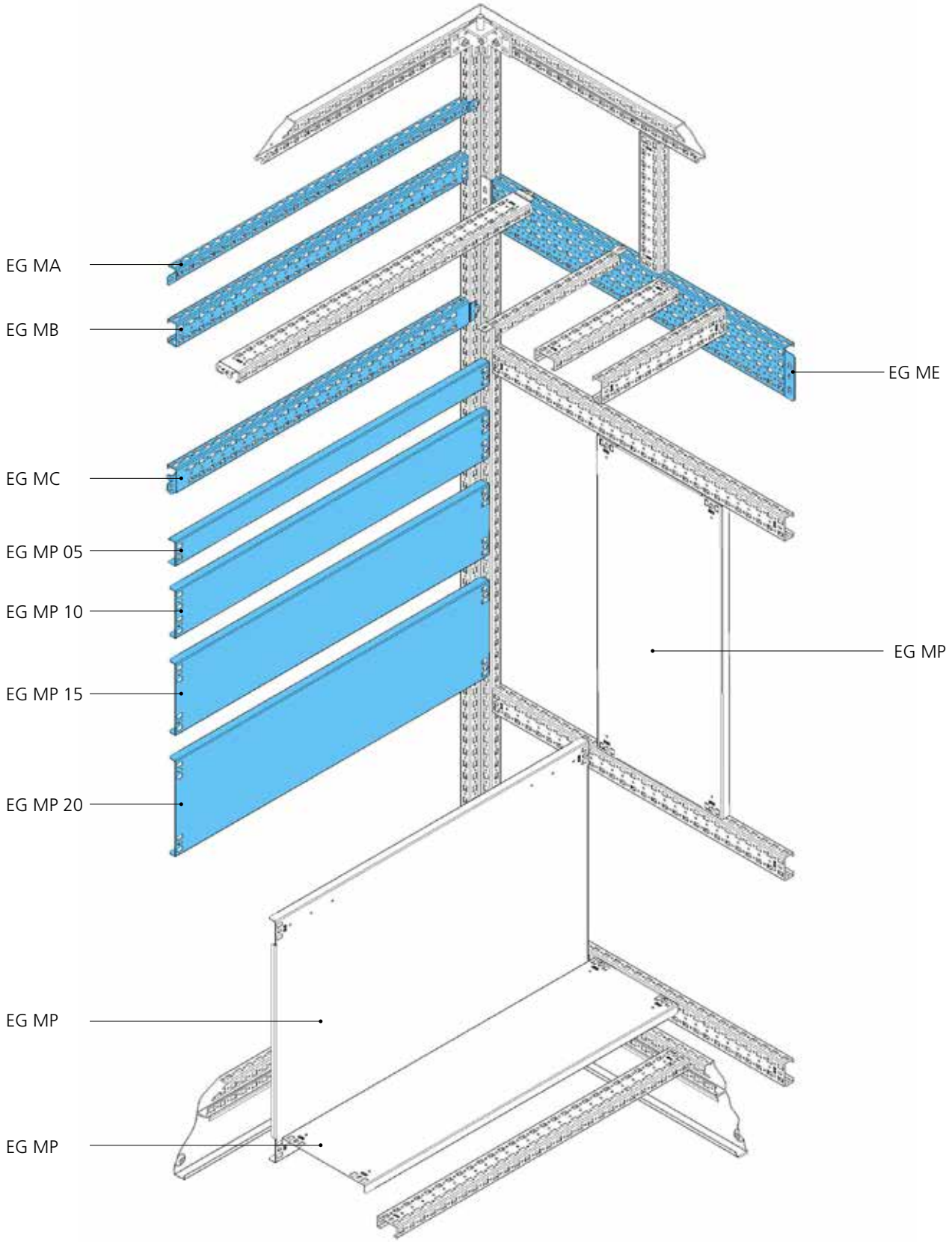

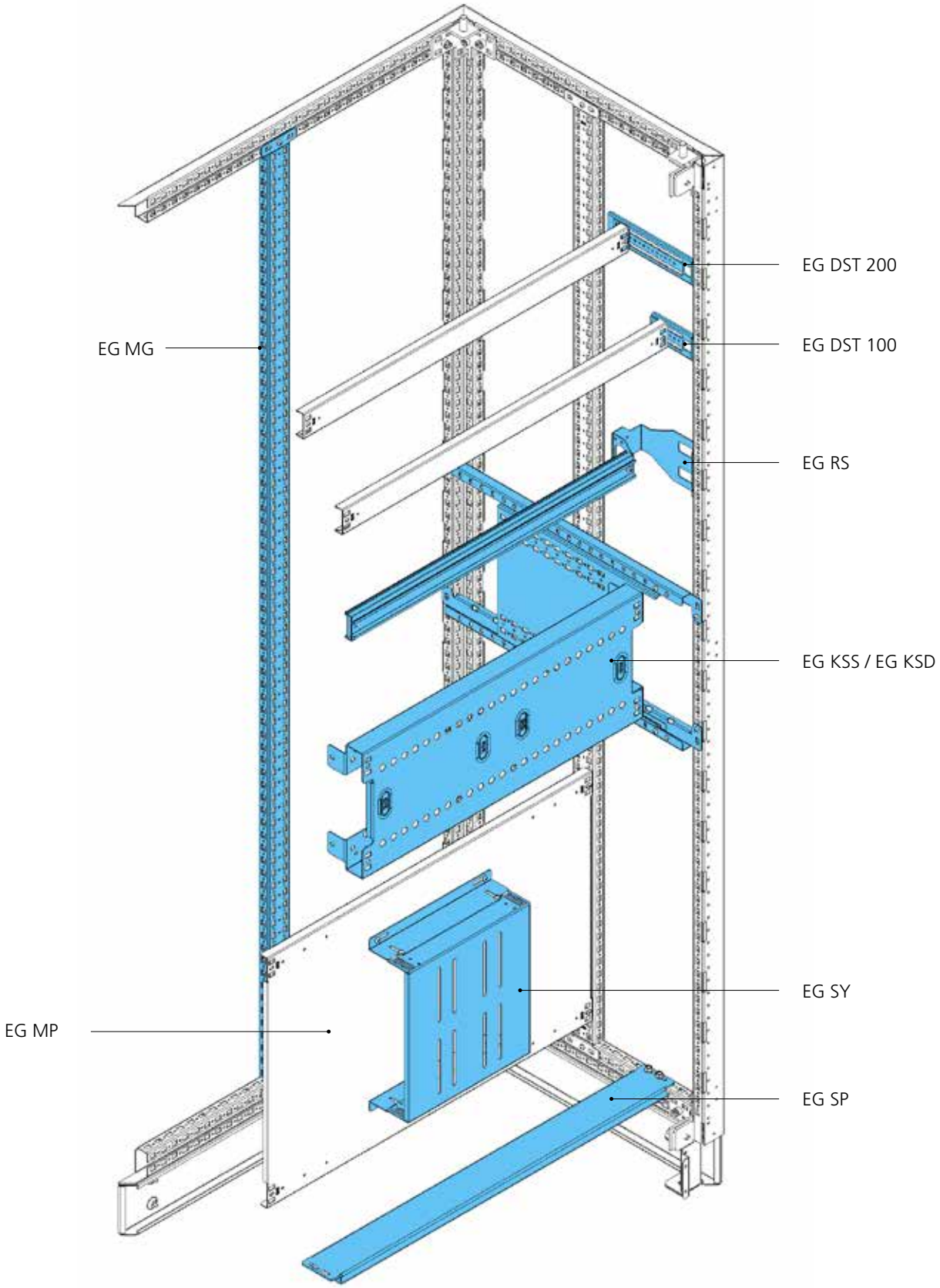
EG DST 200
EG MG
EG DST 100
EG RS
EG KSS / EG KSD
EG SY
EG MP
EG SP

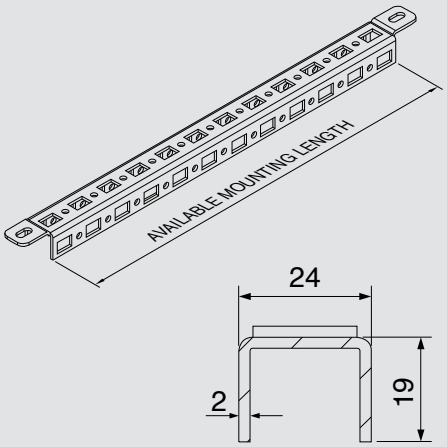

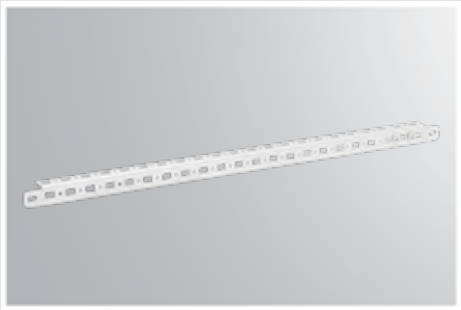

Mounting Rail - EG MA

It is designed for general use.

Material : Galvanized steel sheet
Surface : Galvanized
Content : 1 piece of Mounting rail
2 pieces of M5x8 Self-tapping screw

Applicable Series: ES ED EL HF HS XS

Mounting rail

Mounting gap (mm)	Order Code	Mounting gap (mm)	Order Code	Mounting gap (mm)	Order Code
300	EG MA 0300	900	EG MA 0900	1500	EG MA 1500
325	EG MA 0325	925	EG MA 0925	1525	EG MA 1525
350	EG MA 0350	950	EG MA 0950	1550	EG MA 1550
375	EG MA 0375	975	EG MA 0975	1575	EG MA 1575
400	EG MA 0400	1000	EG MA 1000	1600	EG MA 1600
425	EG MA 0425	1025	EG MA 1025	1625	EG MA 1625
450	EG MA 0450	1050	EG MA 1050	1650	EG MA 1650
475	EG MA 0475	1075	EG MA 1075	1675	EG MA 1675
500	EG MA 0500	1100	EG MA 1100	1700	EG MA 1700
525	EG MA 0525	1125	EG MA 1125	1725	EG MA 1725
550	EG MA 0550	1150	EG MA 1150	1750	EG MA 1750
575	EG MA 0575	1175	EG MA 1175	1775	EG MA 1775
600	EG MA 0600	1200	EG MA 1200	1800	EG MA 1800
625	EG MA 0625	1225	EG MA 1225	1825	EG MA 1825
650	EG MA 0650	1250	EG MA 1250	1850	EG MA 1850
675	EG MA 0675	1275	EG MA 1275	1875	EG MA 1875
700	EG MA 0700	1300	EG MA 1300	1900	EG MA 1900
725	EG MA 0725	1325	EG MA 1325	1925	EG MA 1925
750	EG MA 0750	1350	EG MA 1350	1950	EG MA 1950
775	EG MA 0775	1375	EG MA 1375	1975	EG MA 1975
800	EG MA 0800	1400	EG MA 1400	2000	EG MA 2000
825	EG MA 0825	1425	EG MA 1425	2025	EG MA 2025
850	EG MA 0850	1450	EG MA 1450	2050	EG MA 2050
875	EG MA 0875	1475	EG MA 1475	2075	EG MA 2075

Unless otherwise specified, all dimensions are in mm.

Mounting Rail - EG MB

It is designed for general use.

Material : Galvanized steel sheet
Surface : Galvanized
Content : 1 piece of Mounting rail
2 pieces of EG MB Fixing bracket
4 pieces of M5x8 Self-tapping screw

Applicable Series: ES ED EL HF HS XS

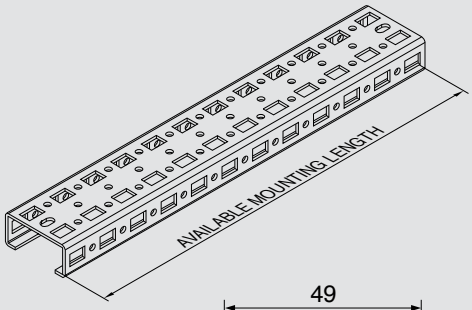

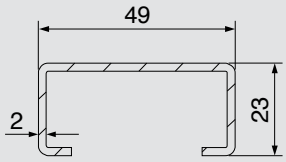

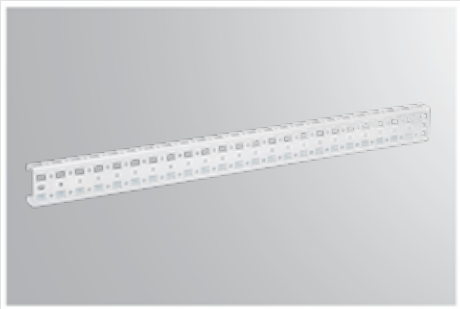

Mounting rail

Mounting gap (mm)	Order Code	Mounting gap (mm)	Order Code	Mounting gap (mm)	Order Code
100	EG MB 0100	775	EG MB 0775	1450	EG MB 1450
125	EG MB 0125	800	EG MB 0800	1475	EG MB 1475
150	EG MB 0150	825	EG MB 0825	1500	EG MB 1500
175	EG MB 0175	850	EG MB 0850	1525	EG MB 1525
200	EG MB 0200	875	EG MB 0875	1550	EG MB 1550
225	EG MB 0225	900	EG MB 0900	1575	EG MB 1575
250	EG MB 0250	925	EG MB 0925	1600	EG MB 1600
275	EG MB 0275	950	EG MB 0950	1625	EG MB 1625
300	EG MB 0300	975	EG MB 0975	1650	EG MB 1650
325	EG MB 0325	1000	EG MB 1000	1675	EG MB 1675
350	EG MB 0350	1025	EG MB 1025	1700	EG MB 1700
375	EG MB 0375	1050	EG MB 1050	1725	EG MB 1725
400	EG MB 0400	1075	EG MB 1075	1750	EG MB 1750
425	EG MB 0425	1100	EG MB 1100	1775	EG MB 1770
450	EG MB 0450	1125	EG MB 1125	1800	EG MB 1800
475	EG MB 0475	1150	EG MB 1150	1825	EG MB 1825
500	EG MB 0500	1175	EG MB 1175	1850	EG MB 1850
525	EG MB 0525	1200	EG MB 1200	1875	EG MB 1875
550	EG MB 0550	1225	EG MB 1225	1900	EG MB 1900
575	EG MB 0575	1250	EG MB 1250	1925	EG MB 1925
600	EG MB 0600	1275	EG MB 1275	1950	EG MB 1950
625	EG MB 0625	1300	EG MB 1300	1975	EG MB 1975
650	EG MB 0650	1325	EG MB 1325	2000	EG MB 2000
675	EG MB 0675	1350	EG MB 1350	2025	EG MB 2025
700	EG MB 0700	1375	EG MB 1370	2050	EG MB 2050
725	EG MB 0725	1400	EG MB 1400	2075	EG MB 2075
750	EG MB 0750	1425	EG MB 1425		

Unless otherwise specified, all dimensions are in mm.

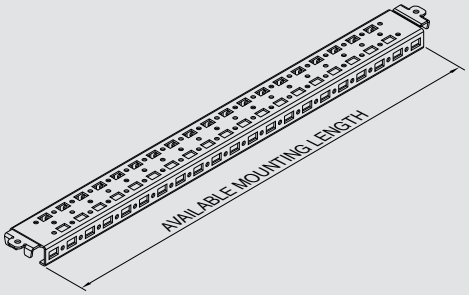

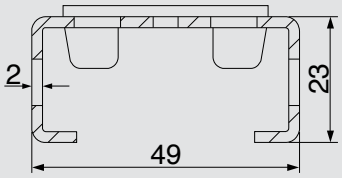

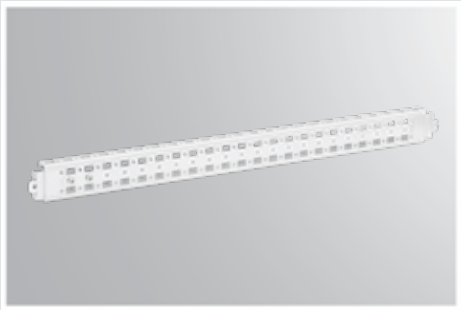

Mounting Rail - EG MC

It is designed for general use.

Material : Galvanized steel sheet
Surface : Galvanized
Content : 1 piece of Mounting rail
2 pieces of M5x8 Self-tapping screw

Applicable Series: ES ED EL HF HS XS

Mounting rail

Mounting Gap (mm)	Order Code	Mounting Gap (mm)	Order Code	Mounting Gap (mm)	Order Code
300	EG MC 0300	900	EG MC 0900	1500	EG MC 1500
325	EG MC 0325	925	EG MC 0925	1525	EG MC 1525
350	EG MC 0350	950	EG MC 0950	1550	EG MC 1550
375	EG MC 0375	975	EG MC 0975	1575	EG MC 1575
400	EG MC 0400	1000	EG MC 1000	1600	EG MC 1600
425	EG MC 0425	1025	EG MC 1025	1625	EG MC 1625
450	EG MC 0450	1050	EG MC 1050	1650	EG MC 1650
475	EG MC 0475	1075	EG MC 1075	1675	EG MC 1675
500	EG MC 0500	1100	EG MC 1100	1700	EG MC 1700
525	EG MC 0525	1125	EG MC 1125	1725	EG MC 1725
550	EG MC 0550	1150	EG MC 1150	1750	EG MC 1750
575	EG MC 0575	1175	EG MC 1175	1775	EG MC 1775
600	EG MC 0600	1200	EG MC 1200	1800	EG MC 1800
625	EG MC 0625	1225	EG MC 1225	1825	EG MC 1825
650	EG MC 0650	1250	EG MC 1250	1850	EG MC 1850
675	EG MC 0675	1275	EG MC 1275	1875	EG MC 1875
700	EG MC 0700	1300	EG MC 1300	1900	EG MC 1900
725	EG MC 0725	1325	EG MC 1325	1925	EG MC 1925
750	EG MC 0750	1350	EG MC 1350	1950	EG MC 1950
775	EG MC 0775	1375	EG MC 1375	1975	EG MC 1975
800	EG MC 0800	1400	EG MC 1400	2000	EG MC 2000
825	EG MC 0825	1425	EG MC 1425	2025	EG MC 2025
850	EG MC 0850	1450	EG MC 1450	2050	EG MC 2050
875	EG MC 0875	1475	EG MC 1475	2075	EG MC 2075

Unless otherwise specified, all dimensions are in mm.

Mounting Rail - EG ME

It is designed to be used in the depth of the panel, suitable for general use.

Material : Galvanized steel sheet
Surface : Galvanized
Content : 1 piece of Mounting rail
2 pieces of M5x8 self-tapping screw

Applicable Series: ES ED EL HF HS XS

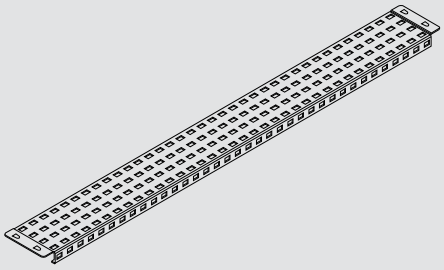

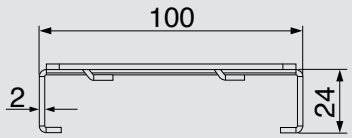

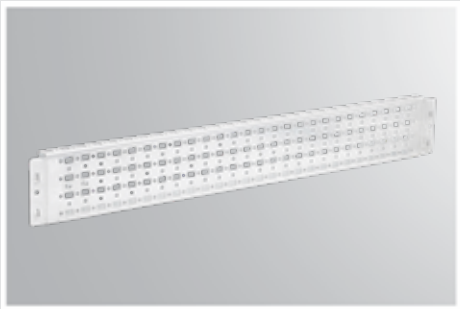

Mounting rail

Enclosure rated depth	Order Code
800	EG ME 0700
900	EG ME 0800
1000	EG ME 0900
1200	EG ME 1100

Mounting Rail - EG MG

It is designed for mounting vertically between horizontal rails.

Material : Galvanized steel sheet
Surface : Galvanized
Content : 1 piece of Mounting rail
2 pieces of M5x8 self-tapping screw

Applicable Series: ES ED EL HF HS XS

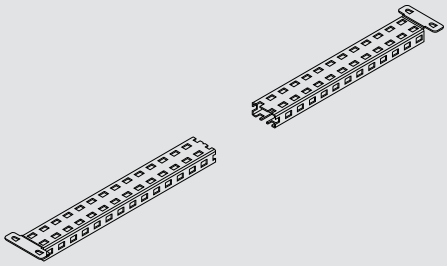

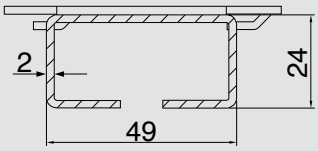

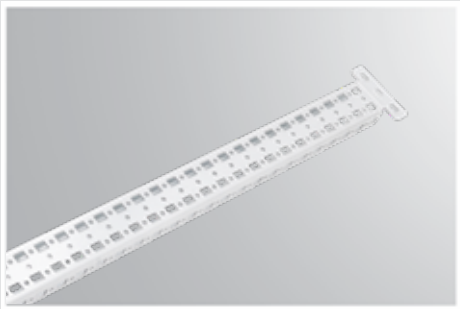

Mounting rail

Enclosure Rated Height	Order Code
1800	EG MG 1650
2000	EG MG 1850
2200	EG MG 2050

Unless otherwise specified, all dimensions are in mm.

Mounting Plates - EG MP

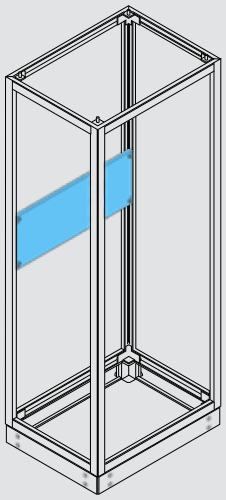

It is providing flat mounting surface suitable for general use.

Material : Galvanized steel sheet
Surface : Galvanized
Content : 1 piece of Mounting plate
1 Piece of Connection and fixing set

Applicable Series: EL ES ED HF HS XS

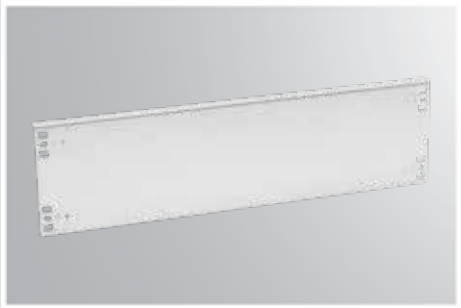

Order coding table

Product Rated Height	Product Rated Width	Available Mounting Width (mm)
05 (50 mm)	03	250
10 (100 mm)	04	350
15 (150 mm)	05	450
20 (200 mm)	06	550
25 (250 mm)	07	650
30 (300 mm)	08	750
35 (350 mm)	09	850
40 (400 mm)	10	950
45 (450 mm)	12*	1150
50 (500 mm)		
60 (550 mm)		

* Only 15 and 20 height types are available in this size.

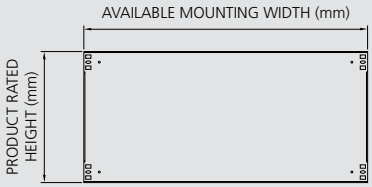

Sample Coding: EG MP 05 03

Product Rated Height — Product Rated Width

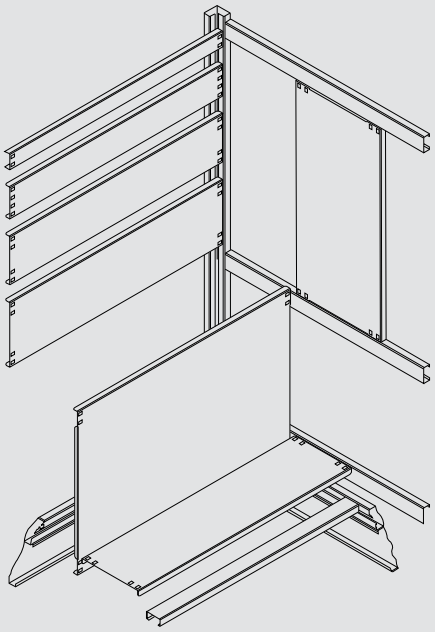

Unless otherwise specified, all dimensions are in mm.

Special Mounting Rail - EG SP

It is designed for general use.

Material : 3mm Steel sheet
Surface : Galvanized
Content : 1 piece of Mounting profile
1 piece of Fittings set

Applicable Series: ES ED EL HF HS XS

Note: For weight bearing capacity, please check Shipment Instruction / Transportation - Loading and Storage Manual

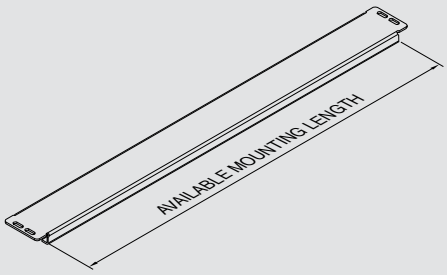

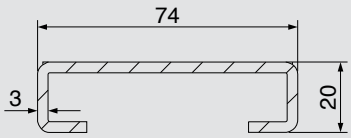

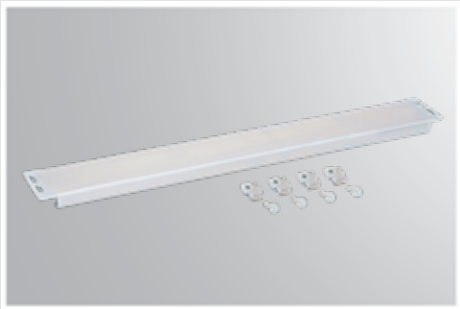

Special mounting rail

Available Mounting Width (mm)	Order Code
350	EG SP 04
450	EG SP 05
550	EG SP 06
650	EG SP 07
750	EG SP 08
850	EG SP 09
950	EG SP 10
1050	EG SP 11
1150	EG SP 12

Unless otherwise specified, all dimensions are in mm.

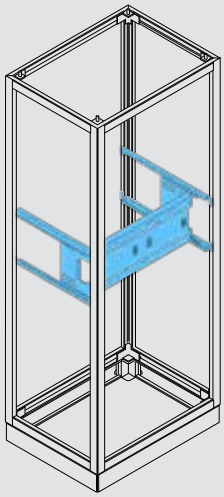

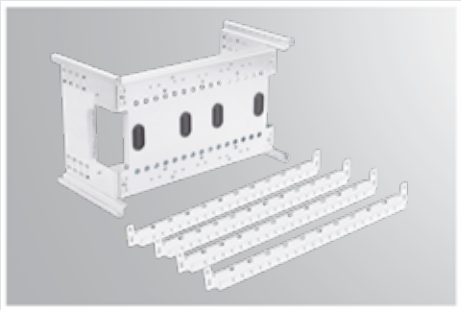

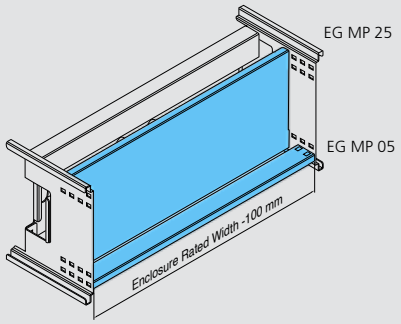

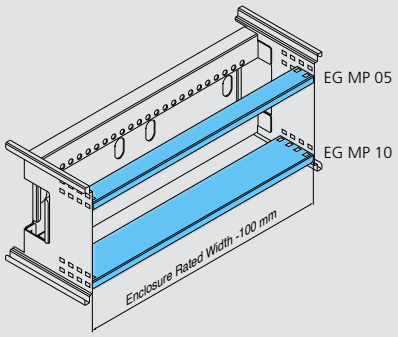

Unless otherwise specified, all dimensions are in mm.

Power Factor Compensation Module - EG KSS

Designed for assembling p.f. compensation equipments. Thanks to its sliding design it provides ease of assembly and use.

Material : Galvanized steel sheet
Surface : Galvanized
Content : 1 piece of Body plate
2 pieces of Side plates
4 pieces of Depth guide rails
1 piece of Fittings set

Applicable Series ES ED EL

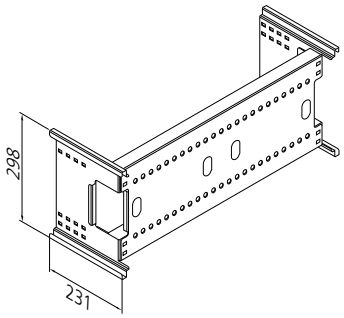

Power factor compensation module

Enclosure Rated Width	Enclosure Rated Depth	Order Code
600	400	EG KSS 0604
	500	EG KSS 0605
	600	EG KSS 0606
	700	EG KSS 0607
	800	EG KSS 0608
700	400	EG KSS 0704
	500	EG KSS 0705
	600	EG KSS 0706
	700	EG KSS 0707
	800	EG KSS 0708
800	400	EG KSS 0804
	500	EG KSS 0805
	600	EG KSS 0806
	700	EG KSS 0807
	800	EG KSS 0808

Application example:

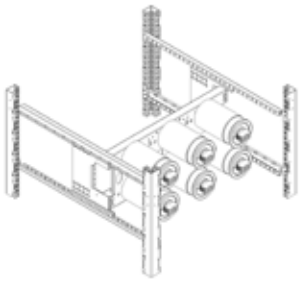

Power Factor Compensation Mounting Plate (Deep Type) - EG KSD

Designed for assembling p.f. compensation equipments. Thanks to its sliding design it provides ease of assembly and use. Side mounting surfaces are longer than the standard type, which allow addiditional means for equipment (e.g. reactors) mounting.

Material : Galvanized steel sheet
Surface : Galvanized
Content : 1 piece of Body plate
2 pieces of Side plates
4 pieces of Depth guide rails
1 piece of Fittings set

Applicable Series

ES ED EL

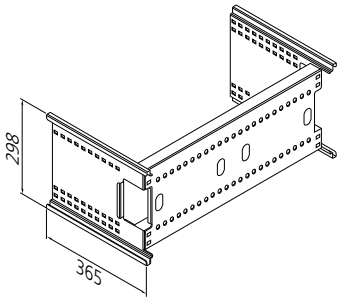

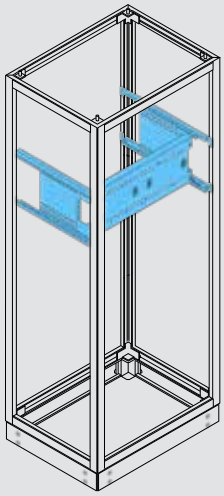

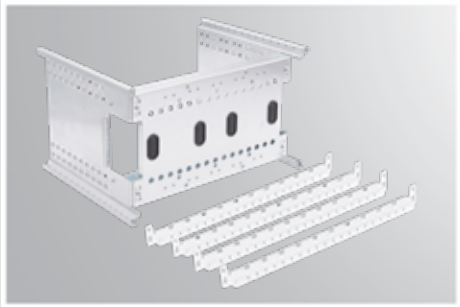

Power factor compensation mounting plate (Deep type)

Enclosure Rated Width	Enclosure Rated Depth	Order Code
600	400	EG KSD 0604
	500	EG KSD 0605
	600	EG KSD 0606
	700	EG KSD 0607
	800	EG KSD 0608
700	400	EG KSD 0704
	500	EG KSD 0705
	600	EG KSD 0706
	700	EG KSD 0707
	800	EG KSD 0708
800	400	EG KSD 0804
	500	EG KSD 0805
	600	EG KSD 0806
	700	EG KSD 0807
	800	EG KSD 0808

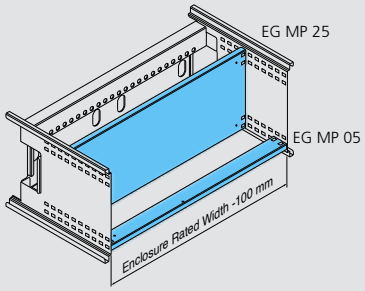

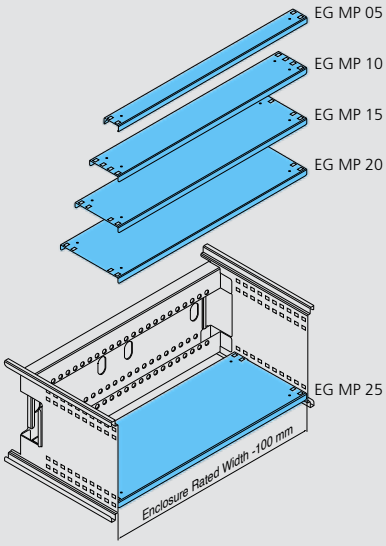

Unless otherwise specified, all dimensions are in mm.

Application example:

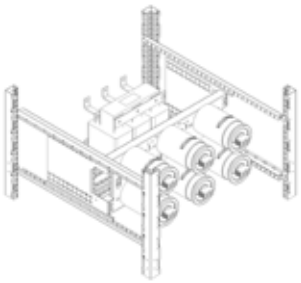

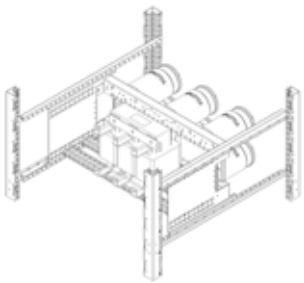

Internal Mounting Accessories

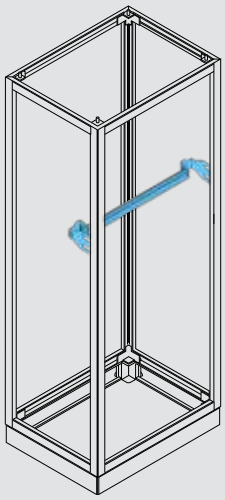

Aluminium Rail Set - EG RS

It is designed for parts that can be mounted on a DIN rail.

Material : Aluminium
Surface : -
Content : 1 pcs. Aluminium rail
2 pcs. Rail fixing parts
1 pcs. Fixing set

Applicable Series: EL ES ED HF HS XS

Aluminium rail set

Enclosure rated width	Order code	Net Dimension (L)
04	EG RS 04	246
05	EG RS 05	346
06	EG RS 06	446
07	EG RS 07	546
08	EG RS 08	646

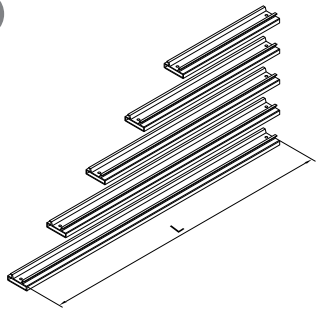

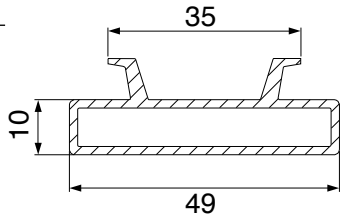

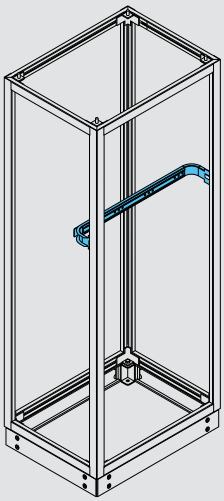

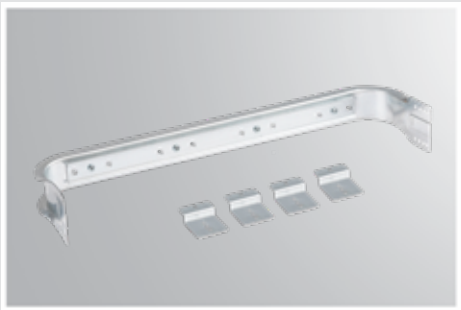

Sheet Rail Set - EG RK

It is designed for parts that can be mounted on a DIN rail.

Material : Galvanized steel sheet
Surface : Galvanized
Content : 1 pcs. Rail bridge profile
1 pcs. Sheet rail
4 pcs. Plastic canal fixing kits
12 pcs. M5x8 mm self-tapping screws

Applicable Series: EL ES ED HF HS XS

Sheet rail set

Enclosure rated width	Order code
04	EG RK 04
05	EG RK 05
06	EG RK 06
07	EG RK 07
08	EG RK 08

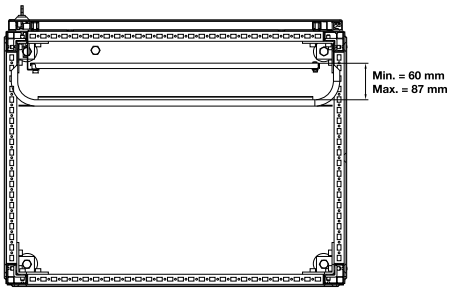

Unless otherwise specified, all dimensions are in mm.

MCCB Adjustable Mounting Plate - EG SY

It is designed for adjusting the mounting depth of the MCCB.

Material : Galvanized steel sheet
Surface : Galvanized
Content : 1 piece of MCCB Mounting plate
2 pieces of Side holders
12 pieces of M5x8 Self-tapping screw

Applicable Series: ES ED EL HF HS XS

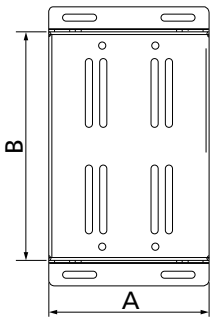

MCCB adjustable mounting plate

Dimension A (mm)	Dimension B (mm)	Order Code
80	150	EG SY 80*150
90	200	EG SY 90*200
105	200	EG SY 105*200
140	200	EG SY 140*200
140	300	EG SY 140*300
190	200	EG SY 190*200
210	300	EG SY 210*300
210	400	EG SY 210*400
280	300	EG SY 280*300
280	400	EG SY 280*400
290	300	EG SY 290*300

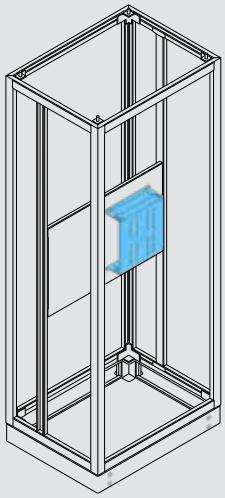

Adjustable Mounting Plate - EG RT

It is designed to create a mounting surface suitable for general use.
Depth adjustment is possible with a 5 mm step.

Material : Galvanized steel sheet
Surface : Galvnized
Content : 2 pcs. EG RTT fixing set
2 pcs. EG RTP fixing set
1 piece EG MP mounting plate
1 piece connection set

Applicable Series: ES ED EL HF HS XS

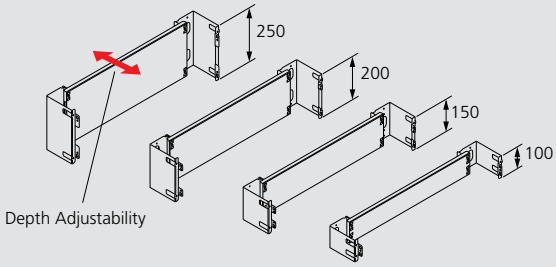

Adjustable mounting plate

Product rated height	Product rated width (Enclosure rated width)
10 (100 mm)	04
15 (150 mm)	05
20 (200 mm)	06
25 (250 mm)	07
	08
	10

Example Coding:
EG RT 15 06
Plate Height — Enclosure Width

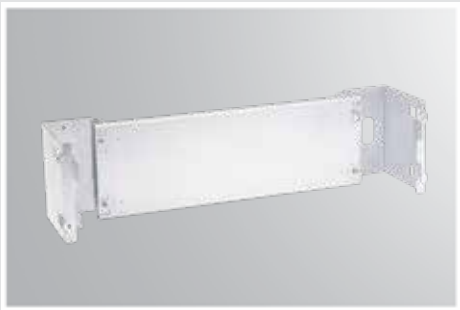

Unless otherwise specified, all dimensions are in mm.

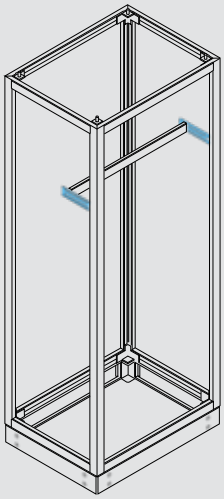

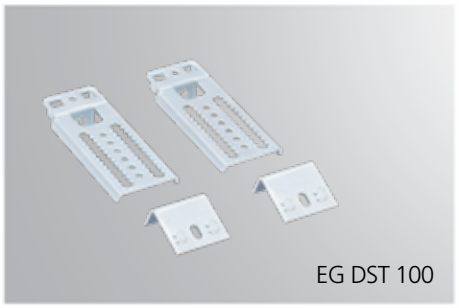

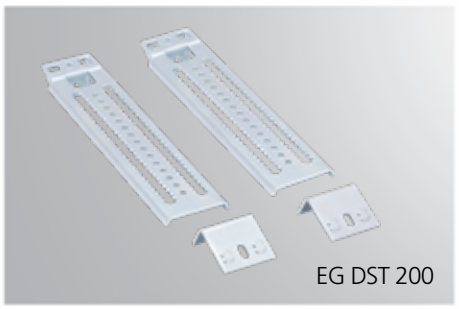

Special Fixing Set - EG DST

It is suitable for general use and provides the possibility of forward or backward adjustment of EG MP mounting plates.

Material	: Steel sheet
Surface	: Galvanized
Content	: 2 pieces of Fixing body 2 pieces of Depth adjustable fixing bracket 6 pieces of M5x8 Self-tapping screw
Applicable Series	ES ED EL HF HS XS

Depth adjustment fixing set

Order Code	EG DST 100
	EG DST 200

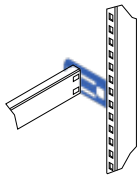

EG DST 100

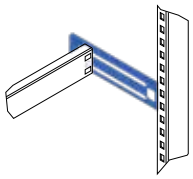

EG DST 200

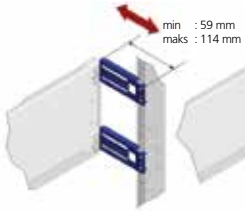

EG 100

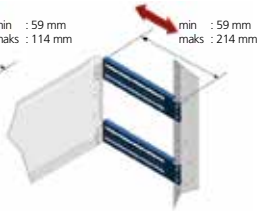

EG DST 200

Carriying capacity

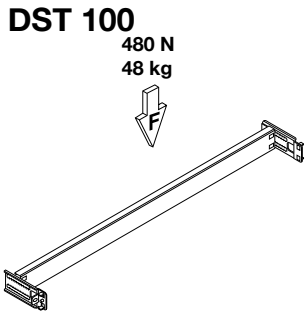

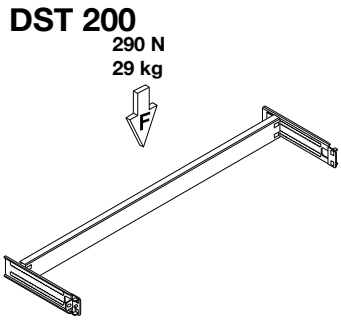

Unless otherwise specified, all dimensions are in mm.

19 inch Swing Frame - EG MF

It is designed for mounting 19 inch wide devices up to 38U height. It has hinged structure and integrated lock.

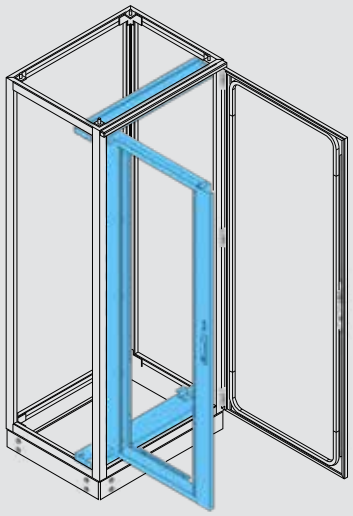

Material	: Galvanized steel sheet
Surface	: RAL 7035 (Grey Colour)
Content	: 1 piece of 19 inch Swing frame 2 pieces of Support rails in width 1 piece of Fittings set
Applicable Series	ES ED EL

19 inch swing frame

Order Code	EG MF

Note: It can be used in enclosures with rated height of 2000 and rated width of 800 mm.

In standard design hinges are positioned at left for opening leftward.

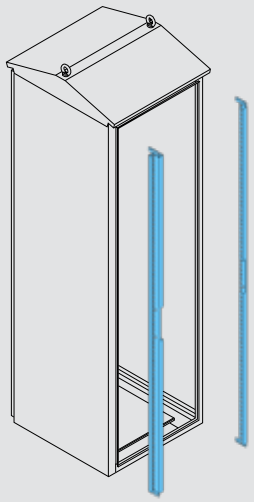

Adapter Rail - HF AO

It is designed to create a mounting surface on the front side of HF series enclosures.

Material : Galvanized steel sheet
Surface : Galvanized
Content : 2 pieces of Adapter rails
1 pieces of Fittings set

Applicable Series HF

Adapter rail

Enclosure Rated Height	Order Codes
1600	HF AO 16
2000	HF AO 20

Front Cover Frame Set - HS OS

It's designed for fixing of front cover plates in floor-standing modular outdoor enclosures.

Material : Galvanized steel sheet
Surface : Painted, RAL 7035 (Grey Colour)
Content : 2 pieces of Height cover rails
2 pieces of Width cover rails
1 piece of Fittings set

Applicable Series HS

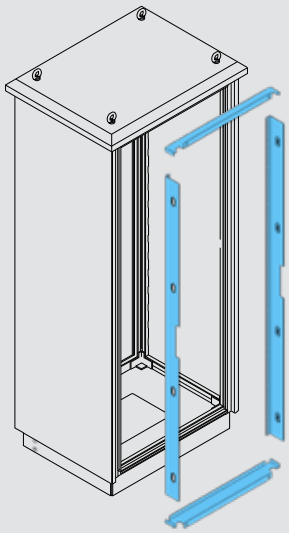

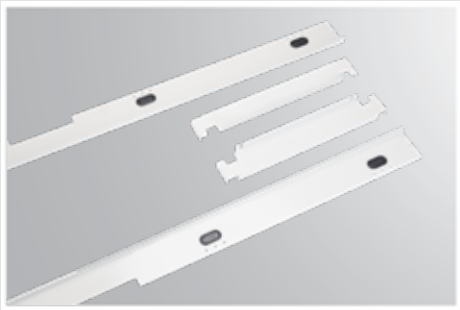

Front cover frame set

Enclosure Rated Height	Enclosure Rated Width	Order Code
1800	400	HS OS 1804
	500	HS OS 1805
	600	HS OS 1806
	700	HS OS 1807
	800	HS OS 1808
2000	400	HS OS 2004
	500	HS OS 2005
	600	HS OS 2006
	700	HS OS 2007
	800	HS OS 2008

Enclosure Rated Height	Enclosure Rated Width	Order Code
2200	400	HS OS 2204
	500	HS OS 2205
	600	HS OS 2206
	700	HS OS 2207
	800	HS OS 2208

Front Cover Frame Set - HF OS

It is designed for fixing of front cover plates in floor-standing monoblock outdoor enclosures.

Material : Galvanized steel sheet
Surface : Painted, RAL 7035 (Grey Colour)
Content : 2 pieces of Height cover rails
2 pieces of Width cover rails
2 pieces of Adapter rails (HF AO)
1 piece of Fittings set

Applicable Series HF

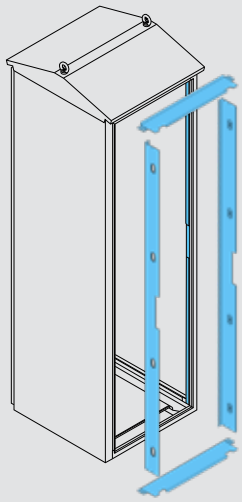

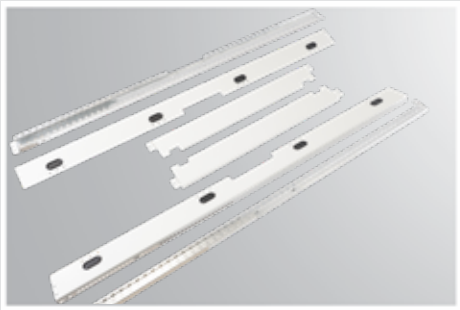

Front cover frame set

Enclosure Rated Height	Enclosure Rated Width	Order Codes
1600	600	HF OS 1606
	800	HF OS 1608
2000	600	HF OS 2006
	800	HF OS 2008

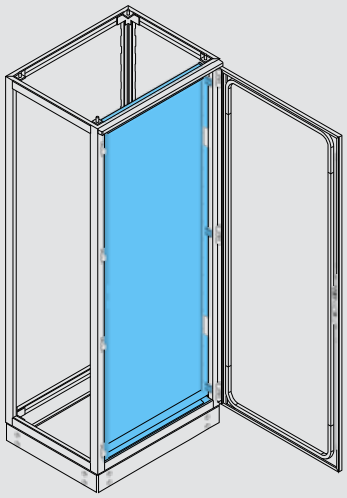

Full Height Cover Plate - EG OB

It is designed for general use. It has a hinged structure and two quarter turn locks.

Material : Galvanized steel sheet
Surface : Painted, RAL 7035 (Grey Colour)
Content : 1 piece of Full height cover plate
2 pieces of Width connection rails
1 piece of Fittings set

Applicable Series: ES ED EL XS

Full height cover plate

Enclosure Rated Height	Enclosure Rated Width	Order Code
1400	400	EG OB 1404
	500	EG OB 1405
	600	EG OB 1406
	700	EG OB 1407
	800	EG OB 1408
1600	400	EG OB 1604
	500	EG OB 1605
	600	EG OB 1606
	700	EG OB 1607
	800	EG OB 1608
1800	400	EG OB 1804
	500	EG OB 1805
	600	EG OB 1806
	700	EG OB 1807
	800	EG OB 1808
2000	400	EG OB 2004
	500	EG OB 2005
	600	EG OB 2006
	700	EG OB 2007
	800	EG OB 2008
2200	400	EG OB 2204
	500	EG OB 2205
	600	EG OB 2206
	700	EG OB 2207
	800	EG OB 2208

Full Height Cover Plate - HS OB

It is suitable for general use in floor-standing modular outdoor type enclosures. It has a hinged structure and two quarter turn locks.

Material : Galvanized steel sheet
Surface : Painted, RAL 7035 (Grey Colour)
Content : 1 piece of Full height cover plate
2 pieces of Width connection rails
1 piece of Fittings set

Applicable Series HS

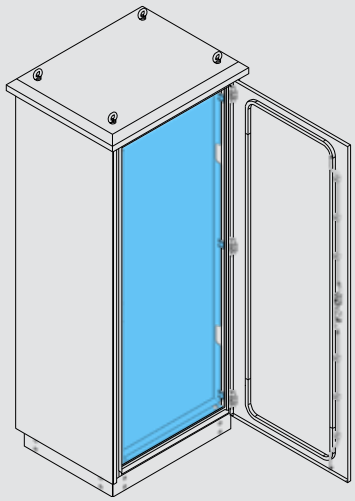

Full height cover plate

Enclosure Rated Height	Enclosure Rated Width	Order Code
1800	400	HS OB 1804
	500	HS OB 1805
	600	HS OB 1806
	700	HS OB 1807
	800	HS OB 1808
2000	400	HS OB 2004
	500	HS OB 2005
	600	HS OB 2006
	700	HS OB 2007
	800	HS OB 2008
2200	400	HS OB 2204
	500	HS OB 2205
	600	HS OB 2206
	700	HS OB 2207
	800	HS OB 2208

Front Cover Plates and Accessories

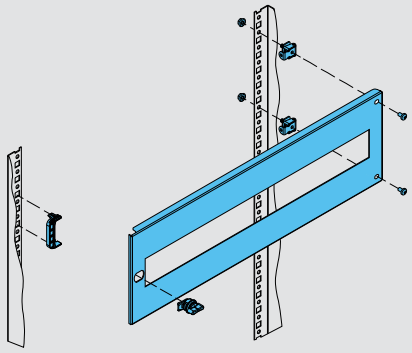

Cover Plate With Hinges - EG OM

It is designed for general use. It has a hinged structure.

Material : Galvanized steel sheet
Surface : Painted, RAL 7035 (Grey Colour)
Content : 1 piece of Cover plate
1 piece of Fittings set

Applicable Series

ES ED EL EM EO EE
HS HM XS XM HF

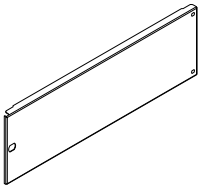

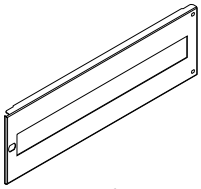

A - Slotted for MCBs

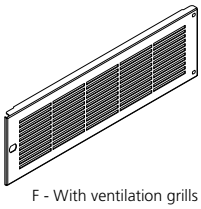

F - With ventilation grills

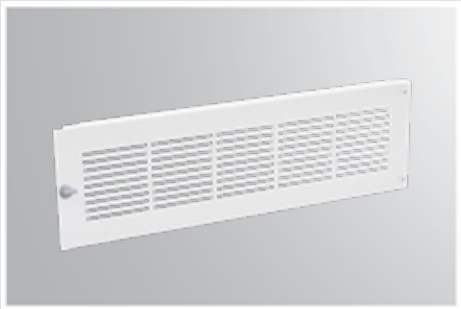

Product Rated Height	Product Width Suitable for Mounting	Order Codes
100	400	EG OM 1004
	500	EG OM 1005
	600	EG OM 1006
	700	EG OM 1007
	800	EG OM 1008
150	400	EG OM 1504 (A,F)
	500	EG OM 1505 (A,F)
	600	EG OM 1506 (A,F)
	700	EG OM 1507 (A,F)
	800	EG OM 1508 (A,F)
200	400	EG OM 2004 (A,F)
	500	EG OM 2005 (A,F)
	600	EG OM 2006 (A,F)
	700	EG OM 2007 (A,F)
	800	EG OM 2008 (A,F)
250	400	EG OM 2504
	500	EG OM 2505
	600	EG OM 2506
	700	EG OM 2507
	800	EG OM 2508
300	400	EG OM 3004
	500	EG OM 3005
	600	EG OM 3006
	700	EG OM 3007
	800	EG OM 3008
350	400	EG OM 3504
	500	EG OM 3505
	600	EG OM 3506
	700	EG OM 3507
	800	EG OM 3508

Product Rated Height	Product Width Suitable for Mounting	Order Codes
450	400	EG OM 4504
	500	EG OM 4505
	600	EG OM 4506
	700	EG OM 4507
	800	EG OM 4508
500	400	EG OM 5004
	500	EG OM 5005
	600	EG OM 5006
	700	EG OM 5007
	800	EG OM 5008
550	400	EG OM 5504
	500	EG OM 5505
	600	EG OM 5506
	700	EG OM 5507
	800	EG OM 5508
650	400	EG OM 6504
	500	EG OM 6505
	600	EG OM 6506
	700	EG OM 6507
	800	EG OM 6508
750	400	EG OM 7504
	500	EG OM 7505
	600	EG OM 7506
	700	EG OM 7507
	800	EG OM 7508

Unless otherwise specified, all dimensions are in mm.

Front Cover Frame Set - EG OS

It is designed for mounting front cover plates.

Material : Galvanized steel sheet
Surface : Painted, RAL 7035 (Grey Colour)
Content : 2 pieces of Height cover rails
2 pieces of Width cover rails
1 piece of Fittings set

Applicable Series: ES ED EL XS

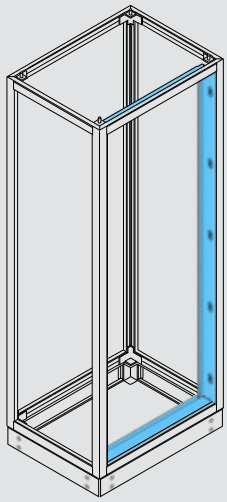

Front cover frame set

Enclosure Rated Height	Enclosure Rated Width	Order Code
1400	400	EG OS 1404
	500	EG OS 1405
	600	EG OS 1406
	700	EG OS 1407
	800	EG OS 1408
1600	400	EG OS 1604
	500	EG OS 1605
	600	EG OS 1606
	700	EG OS 1607
	800	EG OS 1608
1800	400	EG OS 1804
	500	EG OS 1805
	600	EG OS 1806
	700	EG OS 1807
	800	EG OS 1808
2000	400	EG OS 2004
	500	EG OS 2005
	600	EG OS 2006
	700	EG OS 2007
	800	EG OS 2008
2200	400	EG OS 2204
	500	EG OS 2205
	600	EG OS 2206
	700	EG OS 2207
	800	EG OS 2208

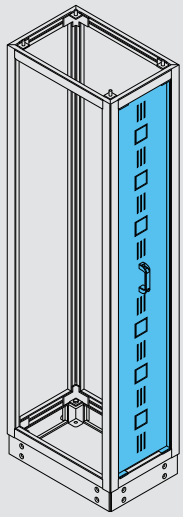

Fixed Cover Plate - EG SO

It is designed for enclosures used as cable or busbar sections. It is fixed with screws.

Material : Galvanized steel sheet
Surface : Painted, RAL 7035 (Grey Colour)
Content : 1 piece of Fixed cover plate
1 piece of Fittings set

Applicable Series: ES ED EL XS

Fixed cover plate

Enclosure Rated Height	Enclosure Rated Width	Order Code
1800	300	EG SO 1803
	400	EG SO 1804
	500	EG SO 1805
	600	EG SO 1806
2000	300	EG SO 2003
	400	EG SO 2004
	500	EG SO 2005
	600	EG SO 2006
2200	300	EG SO 2203
	400	EG SO 2204
	500	EG SO 2205
	600	EG SO 2206

Cover Plate Standard Hinge Kit - EG OMT

It is included in standard supply content of cover plates.

Material : Steel sheet
Surface : Galvanized
Content : 2 pieces of Hinge
1 piece of Fittings set

Applicable
Series : Can be used with EG OM

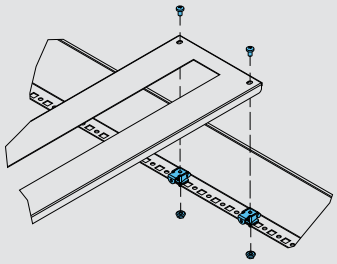

Cover plate standard hinge kit

Order Code	EG OMT

Cover Plate Seal Kit - EG OMM

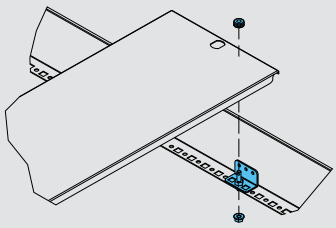

It is designed for sealing of cover plates.

Material : Steel sheet
Surface : Galvanized
Content : 1 piece of Fixing bracket
1 piece of Fittings set
Applicable Series : Can be used with EG OM

Cover plate seal kit

Order Code	EG OMM

Note: An additional hole must be drilled on the cover plate for the seal fixing to be used.

Cover Plate Screw Connection Kit - EG OMV

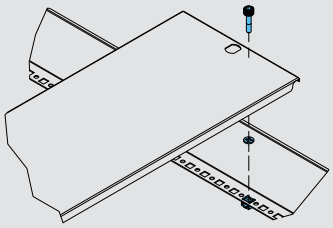

It is designed to be used in cases where screw connection is required for fixing cover plates.

Content : 10 pieces of M6 Special screws
10 pieces of M6 Cage nuts
10 pieces of Plastic retainer washers

Applicable Series : Can be used with EG OM

Cover plate screw connection kit

Order Code	EG OMV

Note: An additional hole must be drilled on the cover plate for the screw fixing to be used.

Ventilation Module - EG HM

It is designed to provide natural ventilation for cooling purposes.

- Wide ventilation opening
- Aesthetic appearance
- IP31 protection class

Material : Galvanized steel sheet
Surface : Painted, RAL 9005 (Black Colour)
Content : 1 piece of Ventilation module
1 piece of Fittings set

Applicable Series: ES ED EL

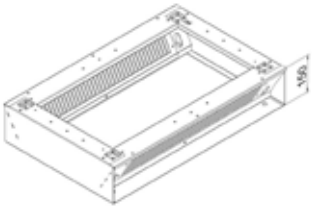

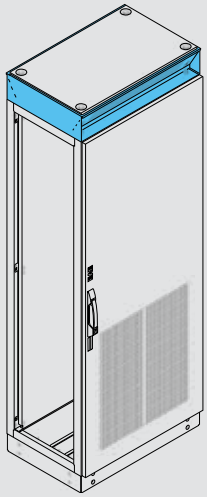

Ventilation module

Enclosure Rated Width	Enclosure Rated Depth	Order Codes
300	600	EG HM 0306
	800	EG HM 0308
	1000	EG HM 0310
400	400	EG HM 0404
	500	EG HM 0405
	600	EG HM 0406
	800	EG HM 0408
	1000	EG HM 0410
500	400	EG HM 0504
	500	EG HM 0505
	600	EG HM 0506
	800	EG HM 0508
	1000	EG HM 0510
600	400	EG HM 0604
	500	EG HM 0605
	600	EG HM 0606
	800	EG HM 0608
	1000	EG HM 0610
700	400	EG HM 0704
	500	EG HM 0705
	600	EG HM 0706
	800	EG HM 0708
	1000	EG HM 0710

Enclosure Rated Width	Enclosure Rated Depth	Order Codes
800	400	EG HM 0804
	500	EG HM 0805
	600	EG HM 0806
	800	EG HM 0808
	1000	EG HM 0810
1000	400	EG HM 1004
	500	EG HM 1005
	600	EG HM 1006
	800	EG HM 1008
	1000	EG HM 1010
1200	400	EG HM 1204
	500	EG HM 1205
	600	EG HM 1206
	800	EG HM 1208
	1000	EG HM 1210

For lifting and transporting by crane, EG HMT 01 lifting kit with hexagonal shaft shall be ordered additionally.

Planing air inflow is necessary to ensure proper ventilation.

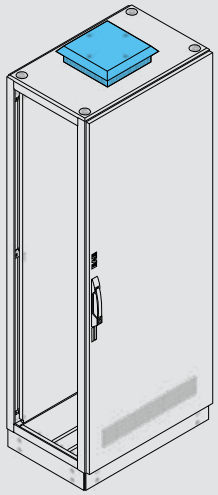

Roof Top Fan - EG FM

It is designed to cool equipments inside of the enclosure efficiently.

- Easy to set-up
- Radial fan with backward blade angle
- Quick and easy assembling feature that does not require bolt connection
- IP20 protection class

Material : Galvanized steel sheet
Surface : Painted, RAL 7035 (Grey Colour)
Content : 1 piece of Roof top fan

Applicable Series ES ED EL

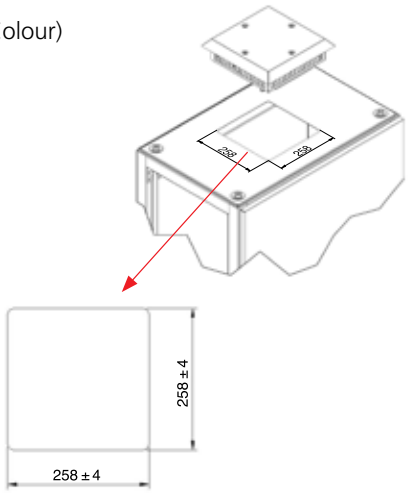

Roof top fan

Order Code	EG FM

Note: It cannot be used on 40 cm wide enclosures.

Measured cooling capacities

T_a : 25 °C	35°	40	45°	50°	55°	60°	65°
T_{int} - T_a = *Temperature difference*	10K	15K	20K	25K	30K	35K	40K
EG FM Roof Top Fan-with D3 Door	475 W	712 W	950 W	1187 W	1425 W	1662 W	1900 W
EG FM Roof Top Fan-with D1 Door	457 W	685 W	914 W	1142 W	1371 W	1600 W	1828 W

Unless otherwise specified, all dimensions are in mm.

Ventilation Set Under Canopy - HS FR

It is designed for using ventilation system under canopy in floor-standing modular and monoblock outdoor enclosures.

Material : Galvanized steel sheet
Surface : RAL 7035 (Grey Colour)
Content : 1 piece Roof fan
(Radial fan produced by German EBM brand (540 m3/h)

Applicable Series HS HF

Ventilation set under canopy

Order Code	HS FR

Note 1: It is also necessary to plan the air intake to ensure ventilation flow.
Note 2: There is no need to dismantle the canopy separately for fan module installation. It can be assembled from inside the enclosure.

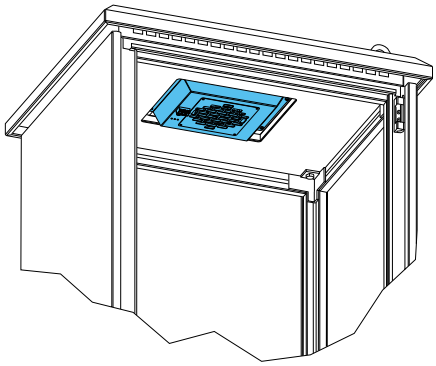

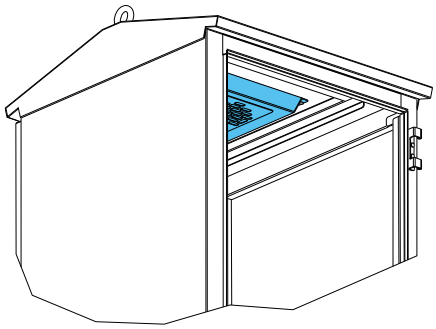

Fan-Filter Unit - EG FAN

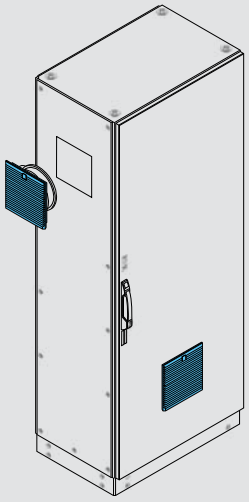

It is designed for cooling when the ambient temperature is lower than the interior temperature of the enclosure.

- Quick and easy assembly without tools
- Quick and easy filter change from outside
- IP44 protection class

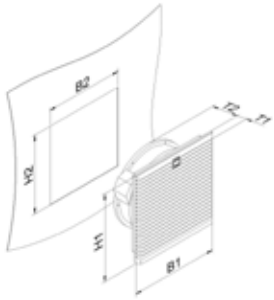

Material : Plastic
Surface : RAL 7035 (Grey Colour)
Content : 1 piece of plastic filtered fan

Applicable Series: EM EO EE HM XM EL ES ED XS EK

Fan-filter unit

Order Code	Product Dimension	Voltage V	Frequency Hz	Flow A	Power W	Noise Level dBA	Fan Flow m³/h
EG FAN 12	150x150	220/240	50/60	0,14	21	48	82
EG FAN 25	250x250	220/240	50/60	0,22	38	59	300

Roller bearing motors are used in fan.

Fan-filter unit

Order Code	B1 x H1 mm	B2 x H2 mm	T1 mm	T2 mm
EG FIL-FAN 12	150x150	123x123	13	67
EG FIL-FAN 25	250x250	223x223	13	115

Filter Unit - EG FIL

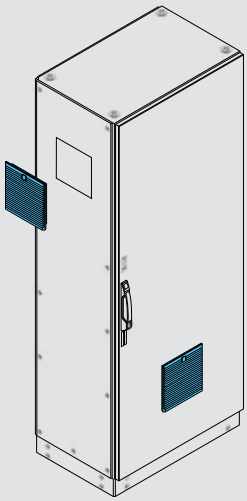

It is designed for cooling when the ambient temperature is lower than the interior temperature of the enclosure.

- Quick and easy assembly without tools
- Quick and easy filter change from outside
- IP44 protection class

Material : Plastic
Surface : RAL 7035 (Grey Colour)
Content : 1 piece of plastic filtered louvre
Applicable Series: EM EO EE HM XM EL ES ED XS EK

Filter unit

Product Dimension	Protection Class	Order code
150x150	IP44	EG FIL 12 44
250x250	IP44	EG FIL 25 44

Spare Filter - EG FS

It is designed to be used as a spare in filtered louvres.

- 5 pcs filter foam, • Washable, • G2 class

Spare Filter (IP44)

Product Dimension	Order code
125x125	EG FS 12 44
250x250	EG FS 25 44

Thermostat - EG ET

It is used to control the fans that can be operated in case the temperature inside the enclosure increases.

- 0-60 °C temperature setting range
- Quick and easy mounting feature, suitable for 35 mm DIN rail

Material : ABS UL94 V0 Flame retardant
Content : 1 piece of Thermostat

Applicable Series: EM EO EE HM XM EL ES ED XS EK

Thermostat

Order Code	EG ET 01

Fan-Filter Unit With Thermostat - EG FAT

It is designed for cooling when the ambient temperature is lower than the interior temperature of the enclosure.

- 0-60 °C temperature setting range
- Quick and easy mounting feature, suitable for 35 mm DIN rail

Material : ABS UL94 V0 Flame retardant
Content : 1 piece of Filtered fan with thermostat

Applicable Series: EM EO EE HM XM EL ES ED XS EK

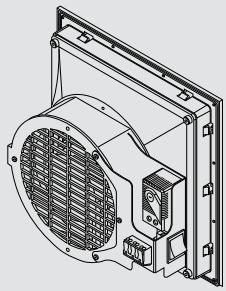

Fan-filter unit with thermostat

Order Code	EG FAT 12
	EG FAT 25

Note: For fan and filter details, please check product pages with EG FAN and EG FIL codes.

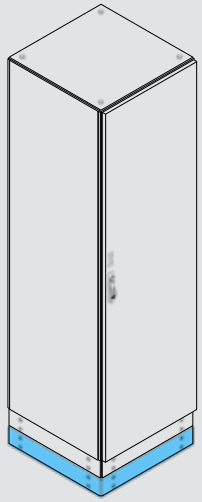

Plinth Set - EG BZ

Mounted under existing plinth of the enclosure, it allows the enclosure to be raised 100 mm more.

Material : Galvanized steel sheet
Surface : Painted, RAL 9005 (Black Colour)
Content : 4 pieces of Plinth corners
4 pieces of Plinth rails
1 piece of Fittings set

Applicable Series: ES ED HS HF

Plinth Set

Enclosure Rated Width	Enclosure Rated Depth	Order Codes
400	400	EG BZ 0404
	500	EG BZ 0405
	600	EG BZ 0406
	700	EG BZ 0407
	800	EG BZ 0408
500	400	EG BZ 0504
	500	EG BZ 0505
	600	EG BZ 0506
	700	EG BZ 0507
	800	EG BZ 0508
600	400	EG BZ 0604
	500	EG BZ 0605
	600	EG BZ 0606
	700	EG BZ 0607
	800	EG BZ 0608
700	400	EG BZ 0704
	500	EG BZ 0705
	600	EG BZ 0706
	700	EG BZ 0707
	800	EG BZ 0708
800	400	EG BZ 0804
	500	EG BZ 0805
	600	EG BZ 0806
	700	EG BZ 0807
	800	EG BZ 0808

Enclosure Rated Width	Enclosure Rated Depth	Order Codes
1000	400	EG BZ 1004
	500	EG BZ 1005
	600	EG BZ 1006
	700	EG BZ 1007
	800	EG BZ 1008
1200	400	EG BZ 1204
	500	EG BZ 1205
	600	EG BZ 1206
	700	EG BZ 1207
	800	EG BZ 1208

Plinth Set - XS BZ

Mounted under existing plinth of the enclosure, it allows the enclosure to be raised 100 mm more.

Material : AISI 304 grade stainless-steel sheet
Surface : -
Content : 4 pieces of Plinth corners
4 pieces of Plinth rails
1 piece of Fittings set

Applicable Series XS

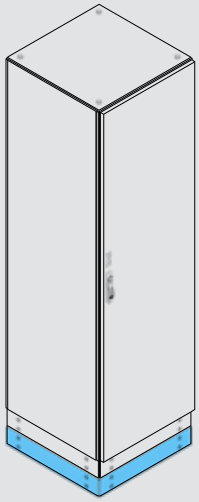

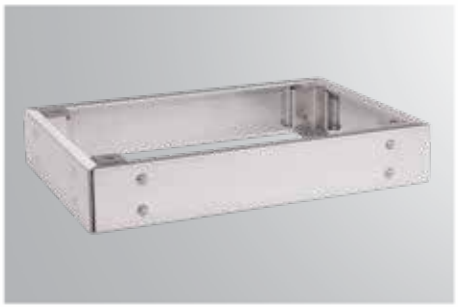

Plinth Set

Enclosure Rated Width	Enclosure Rated Depth	Order Codes
400	400	XS BZ 0404
	500	XS BZ 0405
	600	XS BZ 0406
	700	XS BZ 0407
	800	XS BZ 0408
500	400	XS BZ 0504
	500	XS BZ 0505
	600	XS BZ 0506
	700	XS BZ 0507
	800	XS BZ 0508
600	400	XS BZ 0604
	500	XS BZ 0605
	600	XS BZ 0606
	700	XS BZ 0607
	800	XS BZ 0608
700	400	XS BZ 0704
	500	XS BZ 0705
	600	XS BZ 0706
	700	XS BZ 0707
	800	XS BZ 0708
800	400	XS BZ 0804
	500	XS BZ 0805
	600	XS BZ 0806
	700	XS BZ 0807
	800	XS BZ 0808

Enclosure Rated Width	Enclosure Rated Depth	Order Codes
1000	400	XS BZ 1004
	500	XS BZ 1005
	600	XS BZ 1006
	700	XS BZ 1007
	800	XS BZ 1008
1200	400	XS BZ 1204
	500	XS BZ 1205
	600	XS BZ 1206
	700	XS BZ 1207
	800	XS BZ 1208

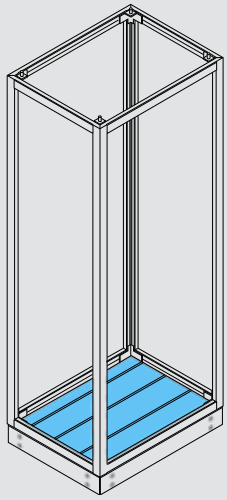

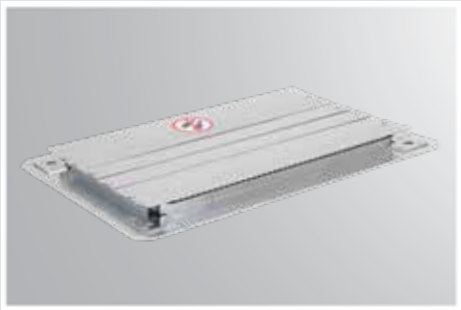

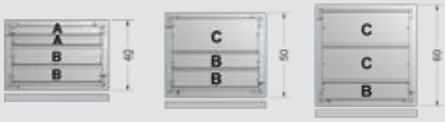

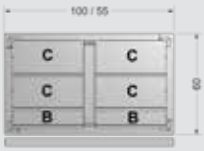

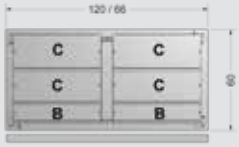

Bottom Gland Plate Set - ES BO

It is designed for easy and fast cable entry.

Material : Galvanized steel sheet
Surface : Galvanized
Content : 1 piece of Gland plate frame
Gland plate cover (ES TK) please check the table below
1 piece of Fittings set

Applicable Series: ES ED

Bottom gland plate set

Enclosure Rated Width	Enclosure Rated Depth	Order Codes
400	400	ES BO 0404
	500	ES BO 0405
	600	ES BO 0406
	700	ES BO 0407
	800	ES BO 0408
500	400	ES BO 0504
	500	ES BO 0505
	600	ES BO 0506
	700	ES BO 0507
	800	ES BO 0508
600	400	ES BO 0604
	500	ES BO 0605
	600	ES BO 0606
	700	ES BO 0607
	800	ES BO 0608
700	400	ES BO 0704
	500	ES BO 0705
	600	ES BO 0706
	700	ES BO 0707
	800	ES BO 0708
800	400	ES BO 0804
	500	ES BO 0805
	600	ES BO 0806
	700	ES BO 0807
	800	ES BO 0808

Module sets with overlapping door

Enclosure Rated Width	Enclosure Rated Depth	Order Codes
1000	400	ES BO 5504
	500	ES BO 5505
	600	ES BO 5506
	700	ES BO 5507
	800	ES BO 5508
1200	400	ES BO 6604
	500	ES BO 6605
	600	ES BO 6606
	700	ES BO 6607
	800	ES BO 6608
1400	400	ES BO 7704
	500	ES BO 7705
	600	ES BO 7706
	700	ES BO 7707
	800	ES BO 7708
1600	400	ES BO 8804
	500	ES BO 8805
	600	ES BO 8806
	700	ES BO 8807
	800	ES BO 8808

Enclosure Rated Depth	ES TK Content (Type)		
	A	B	C
400	2	2	-
500	-	2	1
600	-	1	2
700	-	2	2
800	-	1	3

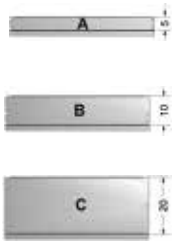

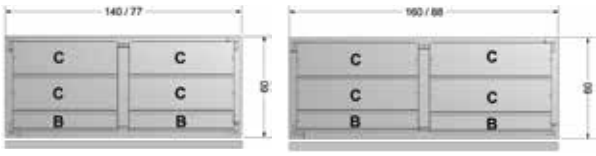

Cable Attachment Rail - EG KTP

It is designed for attaching cables at incoming inside the enclosure.

- Their bending angle prevents cables from being damaged.
- Claw shaped structure facilitate attachment of cable ties.

Material : Galvanized steel sheet
Content : 1 piece of Cable attachment rail
2 pieces of M5x8 Self-tapping screws

Applicable Series: ES ED EL HS XS

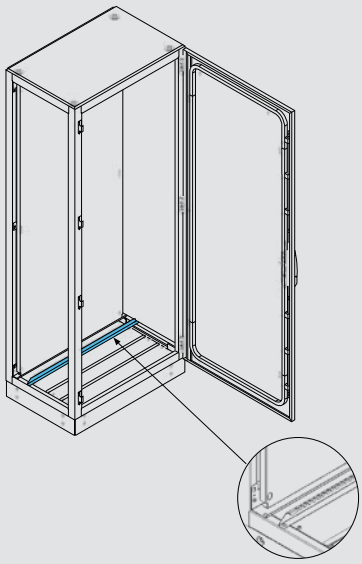

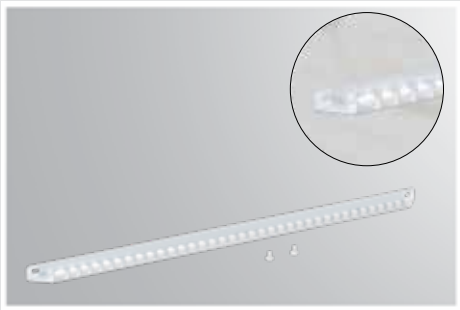

Cable attachment rail

Enclosure Rated Width	Order Code
400	EG KTP 04
500	EG KTP 05
600	EG KTP 06
700	EG KTP 07
800	EG KTP 08
1000	EG KTP 10
1200	EG KTP 12

Brush for Bottom Cable Entry - EG OF

It is used for multiple cable passage at cable entry plates of the enclosures.

- Can be used by cutting to desired size
- It has a nailed structure that provides ease of assembly

Material : PVC
Surface : Painted, Black Colour
Content : 2 meters of Brush for bottom cable entry

Applicable Series: ES ED HS XS

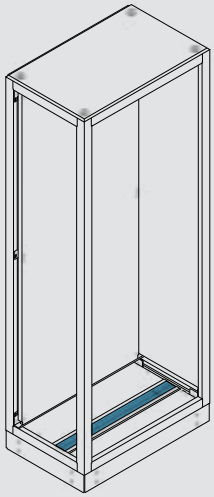

Brush for bottom cable entry

Order Code	EG OF

Gland Plate Gasket Set - EG BOC

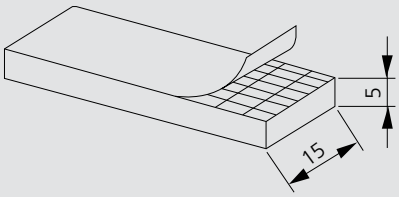

They are used to seal bottom cover plates.

Material : Polyethylene
Surface : Anthracite colour
Content : 6 meters of 5X15 mm One-sided adhesive tape

Applicable Series: ES ED HS XS

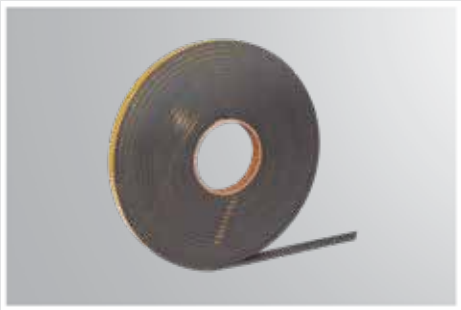

Gland plate gasket set

Order Code	EG BOC

Gland Plate With Brush - EG FR

It is used for multiple cable transits from the cable entry plates of the panels.

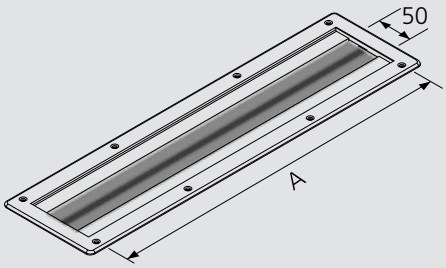

Material : Galvanized steel sheet
Surface : Black colour
Content : 1 piece of Gland plate
2 pieces of PVC brushes
1 piece of Fittings pack

Applicable Series: EM EO EE EL

Gland plate with brush

Gland Plate Rated Dimension	Size A	Order code
400	300	EG FR 40
600	500	EG FR 60

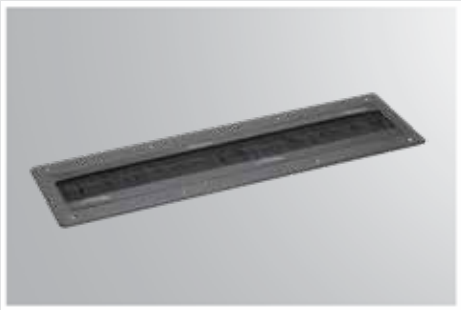

Note: In case of using a gland plate with brush, the IP protection level of the enclosure will decrease to IP 00.

XS KT 01 Stainless-Steel Swinghandle Lock - XS KT

Lift-turn lock system made of AISI 316 grade stainless-steel

Material : AISI 316 grade Stainless-steel
Surface : -
Content : 1 piece of Stainless-steel swinghandle lock

Applicable Series XS

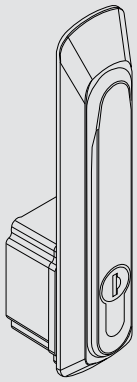

Stainless-steel swinghandle lock

Order Code	XS KT 01

XS KT 02 Stainless-Steel Padlockable Swinghandle Lock - XS KT

Padlockable lift-turn lock system made of AISI 316 grade stainless-steel

Material : AISI 316 grade stainless-steel
Surface : -
Content : 1 piece of Stainless-steel padlockable swinghandle lock

Applicable Series XS

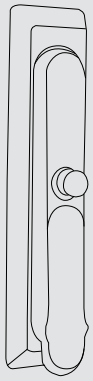

Stainless-steel padlockable swinghandle lock

Order Code	XS KT 02

Espagnolette Lock - EG KT 01

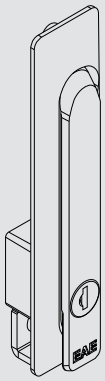

Lift-and-flip featured espagnolette lock type.

Material : Zamak
Surface : Black coated
Content : 1 piece Espagnolette lock

Applicable Series: ES ED EL

EG KT 01 Espagnolette lock

Order Code	EG KT 01

Epagnolette Lock (Padlockable Version) - EG KT 02

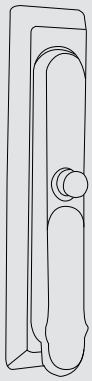

Lift-and-flip featured espagnolette lock type.

Material : Zamak
Surface : Black coated
Content : 1 piece Espagnolette lock (padlock can be installed)

Applicable Series: ES ED EL

EG KT 02 Espagnolette lock

Order Code	EG KT 02

Unless otherwise specified, all dimensions are in mm.

Enclosure Baying

Enclosure Baying Kit - EG PB 00

- It is used for transporting more than one enclosure or for baying them on-site.
- Robust baying at 10 points

Surface : Galvanized
Content : 10 pieces of Special M6 bolts
10 pieces of M6 Spring zamak nut
6 meters gasket set (IP40 version does not include gasket set)

Applicable Series: ES ED EL HS XS

Enclosure baying kit

Protection class	Order Code
IP40	EG PB 00 IP40
IP55	EG PB 00 IP55

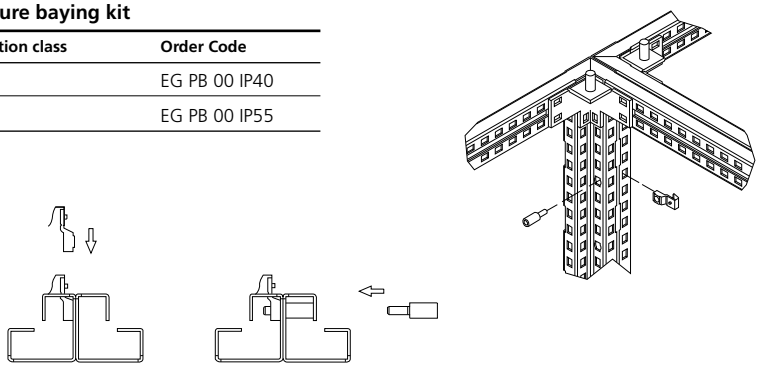

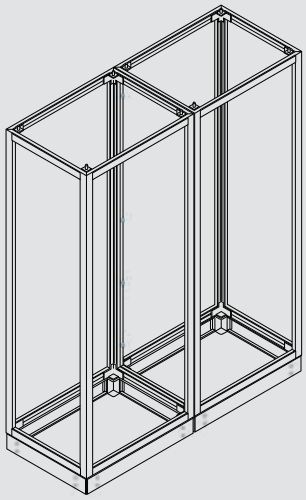

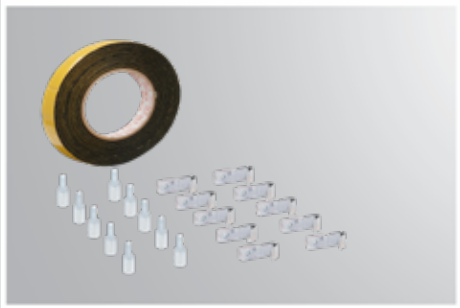

Enclosure Baying Kit - EG PB 03

- It is used for transporting more than one enclosure or for baying them on-site.
- Installation from inside the enclosure without removing the mounting plate.
- Robust baying at 6 points

Material : Steel sheet (4 mm thickness)
Surface : Galvanized
Content : 6 pieces of PB 03 Enclosure baying bracket
24 pieces of M5x12 self-tapping screws
6 meters gasket set (IP40 version does not include gasket set)

Applicable Series: ES ED EL HS XS

Enclosure baying kit

Protection class	Order Code
IP40	EG PB 03 IP40
IP55	EG PB 03 IP55

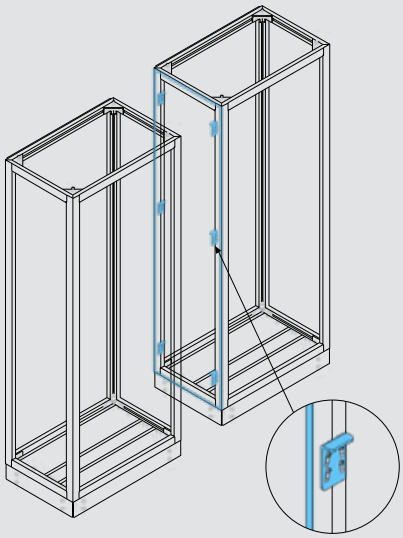

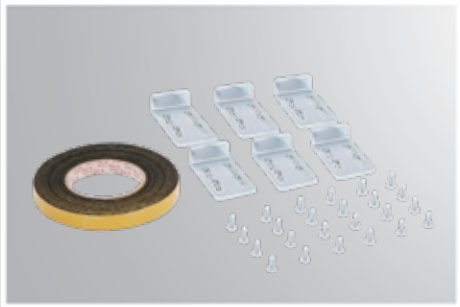

Unless otherwise specified, all dimensions are in mm.

Document Pockets

Plastic Document Pocket - EG PC

It has the feature of sticking with self-adhesive double-sided tape suitable for A4 paper size. It can be fixed with bolts if desired.

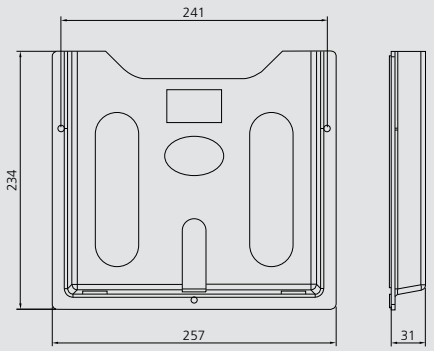

Material : Polystyrene
Surface : Black colour
Content : 1 piece of Plastic drawing pocket

Applicable Series: ES ED EM EO EE EK HS HM XS XM

Project document pocket

Order Code	EG PC

Metal Document Pocket - EG SC

Used for drawing file and folders.

- It can be fixed at the desired height on support rails located inner side of the door.
- Suitable for 75 mm thick folders.

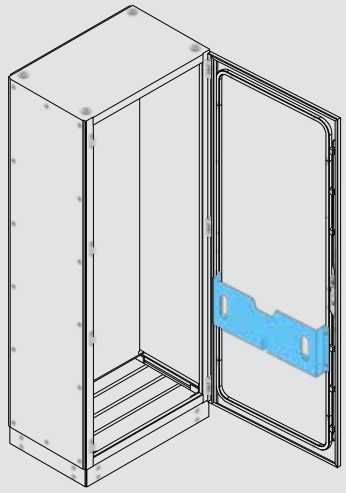

Material : Galvanized steel sheet
Surface : Painted, RAL 9005 (Black Colour)
Content : 1 piece of Sheet metal drawing pocket
4 pieces of M5x8 self-tapping screw
Double sided adhesive tape

Applicable Series: ES ED EL HS HF XS

Steel project pocket - ES, ED, EL, XS

Enclosure rated width	Order Code
400	EG SC 04
500	EG SC 05
600	EG SC 06
700	EG SC 07
800	EG SC 08

Steel project pocket - HS, HF

Enclosure rated width	Order Code
500	EG SC 04
600	EG SC 05
700	EG SC 06
800	EG SC 07

Door Holders

Door Holder Set - HF KS

It is designed to hold the front door of free standing monoblock outdoor enclosure open.

Material : Galvanized steel sheet
Surface : Galvanized
Content : 1 piece of Door holder
1 piece of Fittings set

Applicable Series: HF

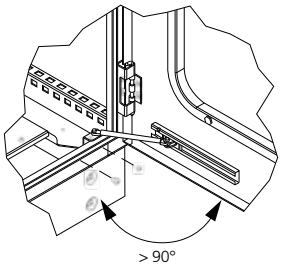

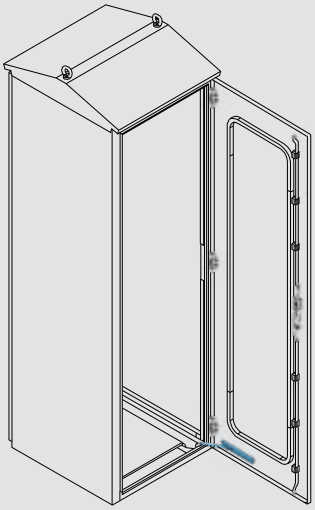

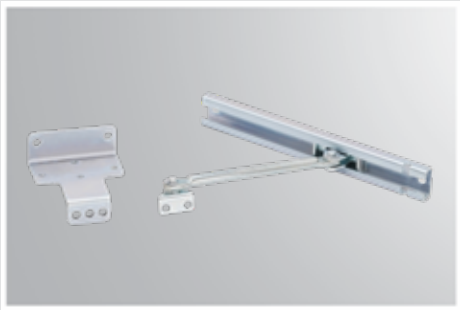

Door holder set

Order Code	HF KS

Door Holder Set - EG DT

It is designed to hold the front door of free standing modular enclosure open.

Material : Steel sheet
Surface : Galvanized
Content : 1 piece of Slotted door rail
1 piece of Fixing bracket
1 piece of Slider arm
1 piece of Fittings set

Applicable Series: ES ED EL

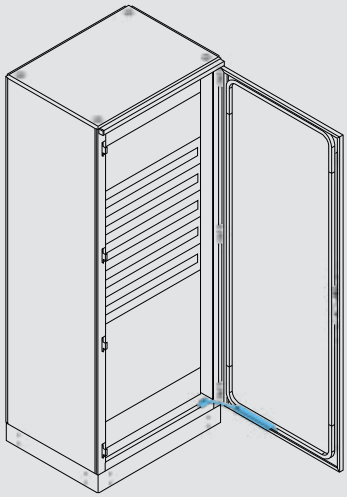

Door holder set

Order Code	EG DT

Unless otherwise specified, all dimensions are in mm.

Lifting Kit - EG AT 01

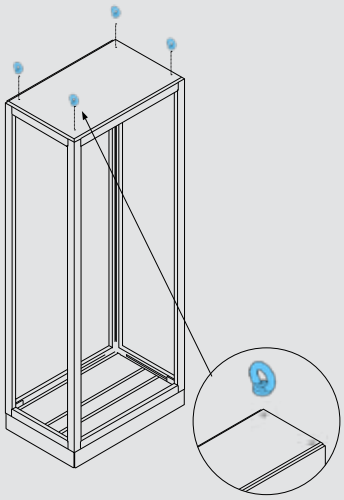

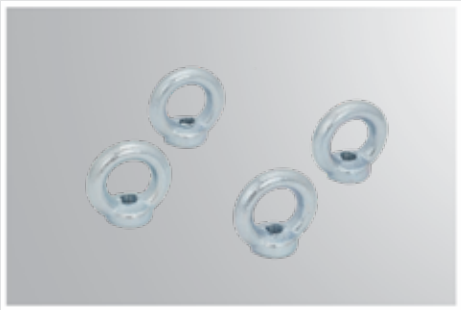

- It is used for lifting enclosures by crane.

Material	: DIN582 - C15E
Surface	: Galvanized
Content	: 4 pieces of M12 Eyebolt
Applicable Series	ES ED

Lifting kit

Order Code	EG AT 01

Please act in accordance with the rules specified in the transportation and loading instructions.

Dual Lifting Kit - EG AT 02

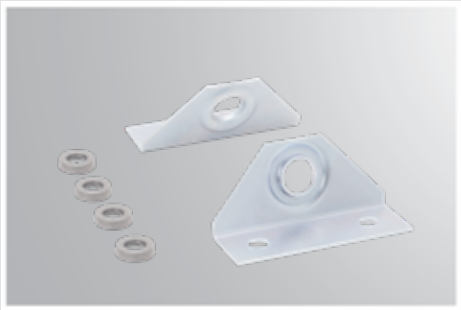

- It is used for lifting bayed enclosures by crane.
- It has a robust design for safe transportation of enclosures.

Material	: Steel sheet
Surface	: Galvanized
Content	: 2 pieces of Dual lifting brackets 4 pieces of Aluminium rings
Applicable Series	ES ED

Dual lifting kit

Order Code	EG AT 02

Please act in accordance with the rules specified in the transportation and loading instructions.

Ventilation Module Lifting Kit - EG HMT 01

It is used when lifting enclosures with ventilation module by crane.

Surface : Galvanized
Content : 4 pieces of M12 Lifting eyebolts
4 pieces of Steel shafts
4 pieces of Aluminum rings

Applicable Series: ES ED EL

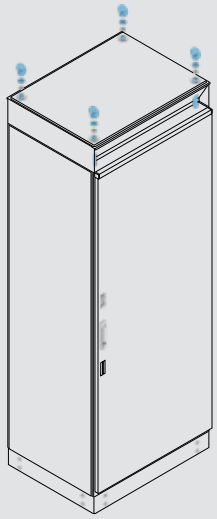

Ventilation module lifiting kit

	Order Code
For Single Enclosure	EG HMT 01

Please act in accordance with the rules specified in the transportation and loading instructions.

Ventilation Module Dual Lifting Kit - EG HMT 02

It is used when lifting bayed enclosures with ventilation module by crane.

Surface : Galvanized
Content : 2 pieces of M12 Dual lifting brackets
4 pieces of Steel shafts
4 pieces of Aluminum rings

Applicable Series: ES ED EL

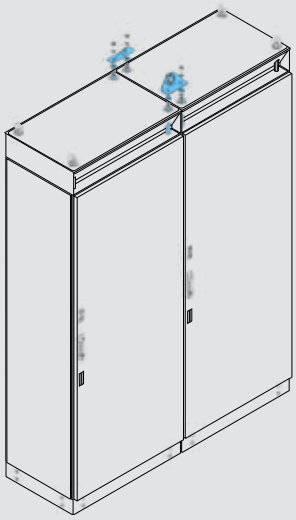

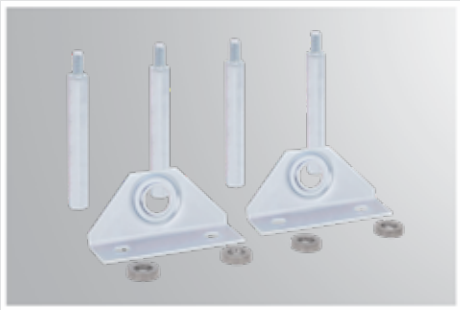

Ventilation module dual lifting kit

	Order Code
For Bayed Enclosures	EG HMT 02

Please act in accordance with the rules specified in the transportation and loading instructions.

Spring Zamak Nut - EG CY

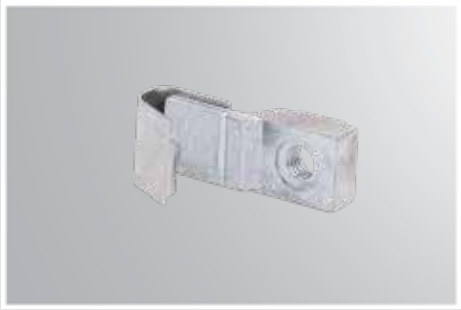

It is designed for general use.

Material : Zamak
Content : 1 pieces of Spring zamak nuts

Applicable Series: ES ED EL HS XS

Spring zamak nut

Size	Order Code
M6	EG CY M6
M8	EG CY M8

Zamak Nut - EG CZ

It is designed for general use.

Material : Zamak
Content : 1 pieces of Zamak nuts

Applicable Series: ES ED EL HS XS

Zamak nut

Size	Order Code
M6	EG CZ M6
M8	EG CZ M8

Earthing Set - EG SKT

It is also designed for situations where it is required to use a ground wire on fixed panels.

Material : -
Content : 1 piece 6 mm² Earthing cable
2 pcs. M5x8 Self-tapping screws
1 piece M5 Special flange nut
2 pieces Earthing stickers

Applicable Series: ES ED EL

Earthing set

Order Code	EG SKT

Unless otherwise specified, all dimensions are in mm.

M5x8 mm Self-Tapping Screw - EG CK 5

Special spiral metric thread structure. It has self-tapping feature for sheet metal surface.

Material : Steel
Surface : Galvanized coating
Content : 100 pieces of M5x8 mm self-tapping screw

Applicable Series

ES ED EL EM EO EE ET
EK HS HM XS XM XT

M5x8 mm self-tapping screw

Order Code	EG CK 5

Snap-On Gasket - EG GC

It is designed to prevent damages from sharp surfaces.

- Can be used by cutting to desired size
- It has a clawed structure that provides ease of assembly.

Material : PVC
Surface : Black colour
Content : Shown as in the table below.

Applicable Series

ES ED EL EM EO EE ET
EK HS HM XS XM XT

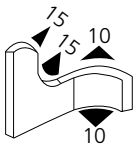

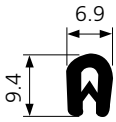

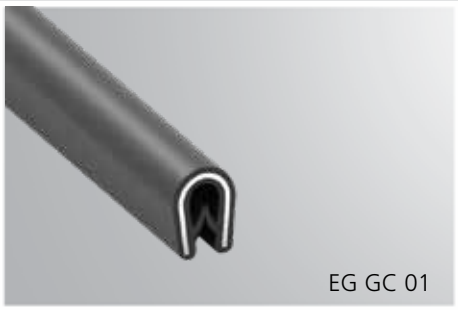

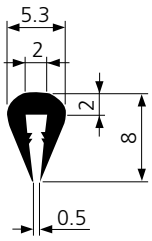

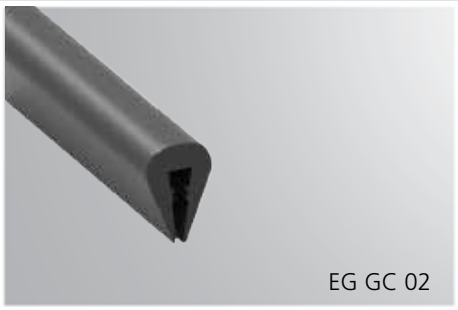

Snap-on gasket

Content	Sheet Range	Wire-Reinforced	Order Code
3 meters	1.0 - 2.0 mm	Yes	EG GC 01
4 meters	0.8 - 1.5 mm	No	EG GC 02

Unless otherwise specified, all dimensions are in mm.

Other Accessories

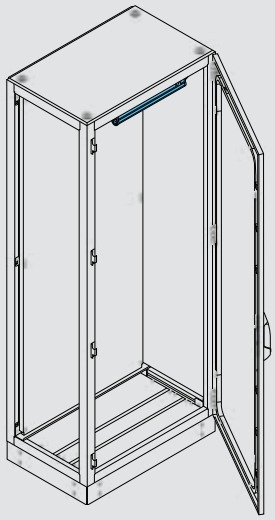

Interior Lighting Fixture - EG KL

It is designed to illuminate the inside of the enclosure.

- Has magnetic sensor that does not require an additional switch
- Manual on/off switch connected in series with magnetic sensor contacts
- Light Colour - natural white
- LED - without lens, 120° light angle

Material : Polycarbonate
Content : 1 piece of Indoor lighting fixture
1 piece of Neodymium magnet
2 pieces of M5x12 mm self-tapping screw

Applicable Series: ES ED EL HS XS

Interior lighting fixture

Order Code		
EG KL	220V AC	25 cm
EG KL	220V AC	50 cm
EG KL	24V DC	25 cm
EG KL	24V DC	50 cm

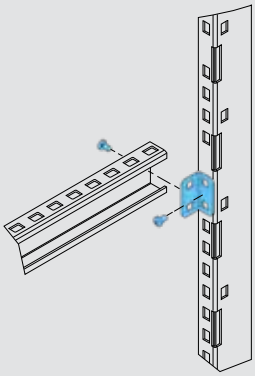

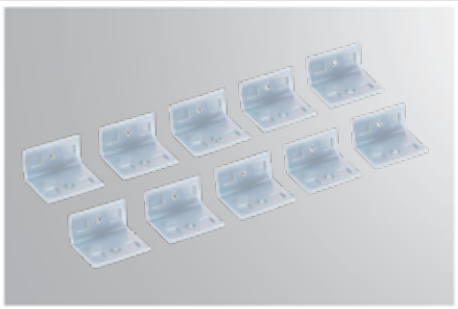

EG MB Fixing Set - EG MBT

It is used for fixing when EG MB mounting rails are cutted.

Material : Steel sheet
Surface : Galvanized
Content : Quantitiy of fixings are given in table below.

Applicable Series: ES ED EL HS HF XS

EG MBT fixing set

Dimension A	Quantity of Fixing	Order Code
20 mm	2	EG MBT 00
25 mm	10	EG MBT 05
30 mm	10	EG MBT 10
35 mm	10	EG MBT 15
40 mm	10	EG MBT 20

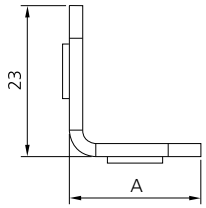

Unless otherwise specified, all dimensions are in mm.

Busbar Riser Module - EG BY

• It is designed to provide cost advantage and space saving in panels where busbar trunking module is used.

Material : Galvanized steel sheet
Surface : Painted, RAL 9005 Black Colour
Content : 1 piece of Busbar module
1 piece of Fittings set

Applicable Series ES ED EL

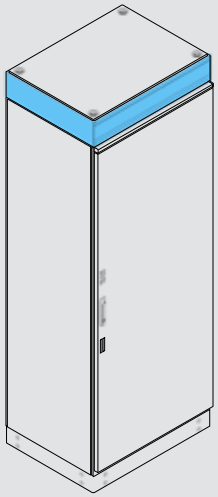

Busbar riser module

Enclosure Rated Width	Enclosure Rated Depth	Order Codes
300	600	EG BY 0306
	800	EG BY 0308
	1000	EG BY 0310
400	400	EG BY 0404
	500	EG BY 0405
	600	EG BY 0406
	800	EG BY 0408
	1000	EG BY 0410
500	400	EG BY 0504
	500	EG BY 0505
	600	EG BY 0506
	800	EG BY 0508
	1000	EG BY 0510
600	400	EG BY 0604
	500	EG BY 0605
	600	EG BY 0606
	800	EG BY 0608
	1000	EG BY 0610
700	400	EG BY 0704
	500	EG BY 0705
	600	EG BY 0706
	800	EG BY 0708
	1000	EG BY 0710

Enclosure Rated Width	Enclosure Rated Depth	Order Codes
800	400	EG BY 0804
	500	EG BY 0805
	600	EG BY 0806
	800	EG BY 0808
	1000	EG BY 0810
1000	400	EG BY 1004
	500	EG BY 1005
	600	EG BY 1006
	800	EG BY 1008
	1000	EG BY 1010
1200	400	EG BY 1204
	500	EG BY 1205
	600	EG BY 1206
	800	EG BY 1208
	1000	EG BY 1210

If lifting by crane is needed EG HMT lifting kit shall be used.

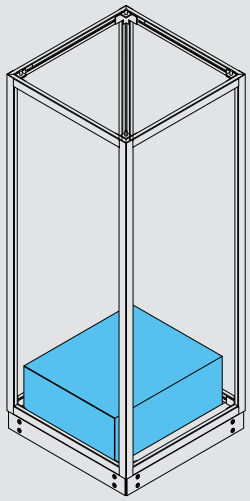

Dust proof type

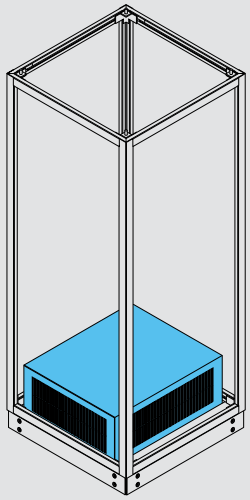

Ventilated type

Bottom Incoming Busbar Module - EG BA

It is designed to be used in cases where the busbar module is entered from the bottom of the switchboard.

Material : Galvanized steel sheet
Surface : RAL 9005 (Black Colour)
Content : 1 piece Bottom incoming busbar module

Applicable Series: ES ED EL

Bottom incoming busbar module

Enclosure Rated Width	Enclosure Rated Depth	Type
600	800, 1000	Dust Proof Ventilated
700		
800		
1000		

Example Coding: EG BA 06 08 TOZ KORUMALI

Size Info — Type

Note 1: The protection class does not change when the dust proof type busbar sub-module is selected in the IP55 enclosure.
Note 2: When the ventilated busbar sub-module is selected in the IP55 enclosure, the protection class decreases to IP31.

Unless otherwise specified, all dimensions are in mm.

ES Front Bar Profile - ES OET

It is designed to be used in case of need for ES series.

Material : Aluminium
Surface : Anodized coating
Content : 1 piece Front bar profile
1 piece Connection pack

Applicable Series ES

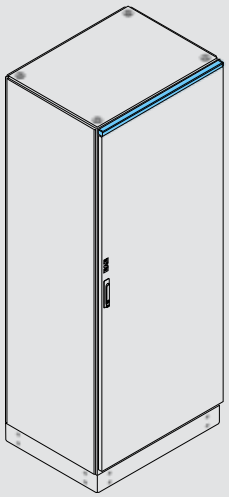

Front bar profile

Enclosure Rated Width	Order Code
400	ES OET 04
500	ES OET 05
600	ES OET 06
700	ES OET 07
800	ES OET 08

Unless otherwise specified, all dimensions are in mm.

Other Accessories

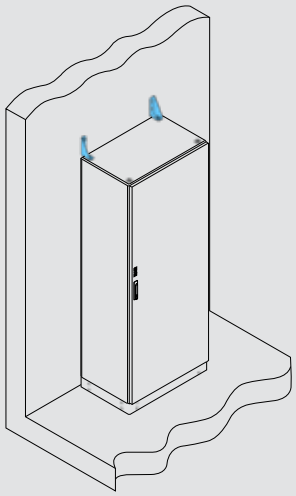

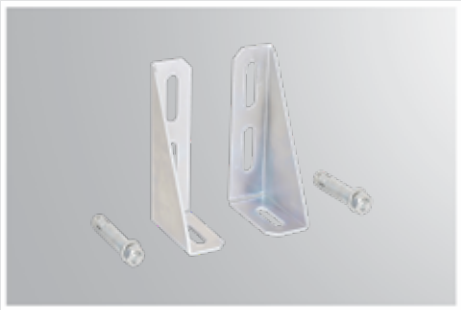

Wall Fixing Set - ES DS

It is designed for fixing the top of the enclosure to the wall.

Material : Steel sheet
Surface : Galvanized
Content : 1 piece of Left fixing bracket
1 piece of Right fixing bracket
2 pieces of M12 steel anchorage bolt

Applicable Series ES ED EL

Wall fixing set

Order Code	ES DS

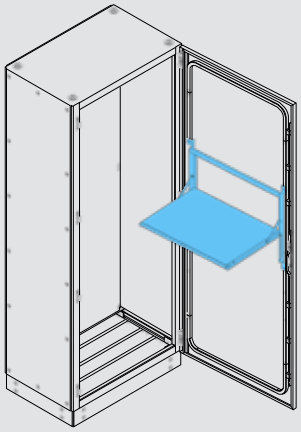

Laptop Table - EG DB

It is designed for laptop use during service and maintenance.

- Thanks to its folding design, it does not take up space in the enclosure.
- It is fixed on support rails located at inner side of the door.

Material : Galvanized steel sheet
Surface : Painted, RAL 9005 (Black Colour)
Content : 1 piece of Laptop table
1 piece of Fittings set

Applicable Series ES ED EL

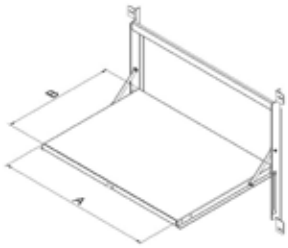

Laptop table

Enclosure Rated Width	Order Code	Dimension A	Dimension B
500	EG DB 05	288	380
600	EG DB 06	388	380
700	EG DB 07	488	270
800	EG DB 08	588	420

Unless otherwise specified, all dimensions are in mm.

Corner Module - EG KM

It is designed to create a layout with corner in accordance with the mounting location.

Material : Galvanized steel sheet
Surface : Painted - body RAL 7035 (Grey Colour) and plinth RAL 9005 (Black Colour)
Content : 1 piece of Corner module welded frame
1 piece of Corner module plinth
1 piece of Fittings set

Applicable Series ES ED

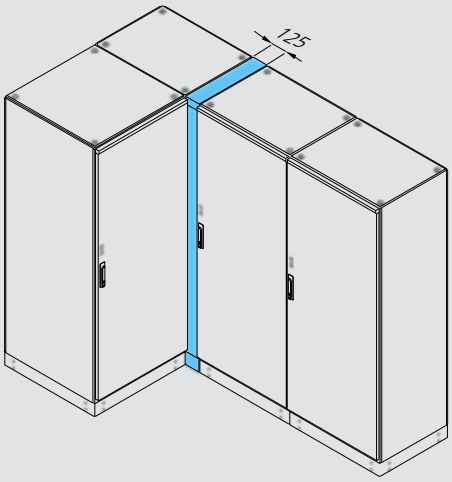

Corner module

Enclosure Rated Height	Enclosure Rated Depth	Order Code
2000	400	EG KM 2004
2000	500	EG KM 2005
2000	600	EG KM 2006
2000	700	EG KM 2007
2000	800	EG KM 2008

Enclosure Rated Height	Enclosure Rated Depth	Order Code
2200	400	EG KM 2204
2200	500	EG KM 2205
2200	600	EG KM 2206
2200	700	EG KM 2207
2200	800	EG KM 2208

Corner Module Plinth Set - EG KB

It is designed to create a corner connection suitable for the mounting location.

Material : Galvanized steel sheet
RAL 9005 (Black Colour)
Content : 1 piece Corner module plinth profile
1 piece Connection pack

Applicable Series ES ED

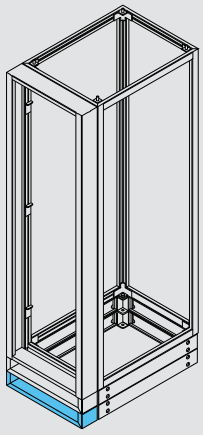

Corner module plinth set

Enclosure Rated Width	Order Code
400	EG KB 04
500	EG KB 05
600	EG KB 06
700	EG KB 07
800	EG KB 08

Unless otherwise specified, all dimensions are in mm.

Other Accessories

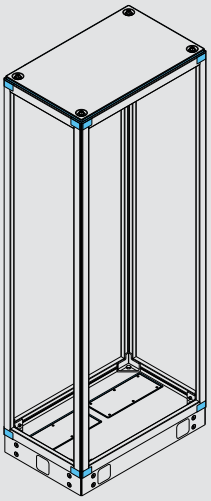

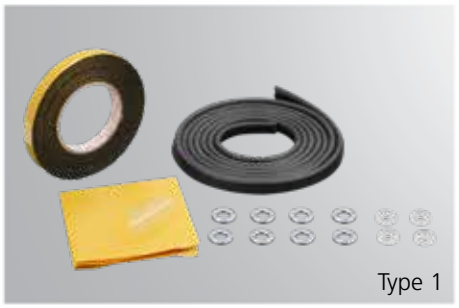

L series module set IP55 kit - EL MSI

It is used in cases when the protection class of L series enclosures is required to be IP55.

Content : 5x15 mm One side self-adhesive tape
Snap-in gasket
M12 washer
Sealing washer for top cover
Sealing tape for corners

Applicable Series EL

L series module set IP55 kit

Enclosure Rated Width	Enclosure Rated Depth	Order Code
400	400, 500	EL MSI Type 1
500		
600		
700		
800		

Enclosure Rated Width	Enclosure Rated Depth	Order Code
800	400, 500	EL MSI Type 2
1000		
1200		

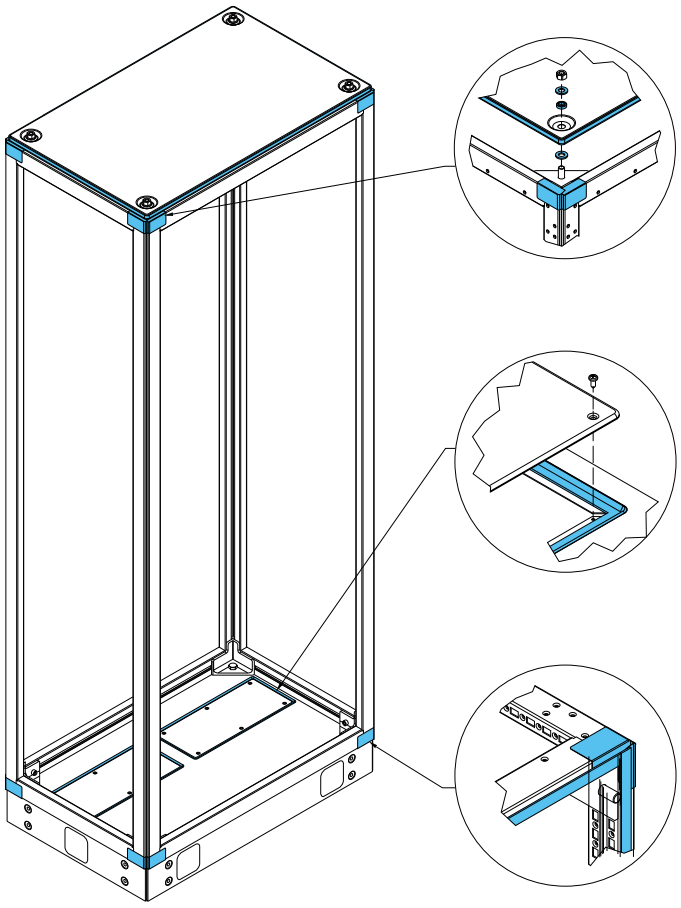

Unless otherwise specified, all dimensions are in mm.

L Series Front and Rear IP55 Set - EL OAI

It is used in cases when the protection class of L series enclosures is required to be IP55.

Content : 5x15 mm One side self-adhesive tape
Grounding clip
M5x8 Self-tapping screws
Sealing washer

Applicable Series EL

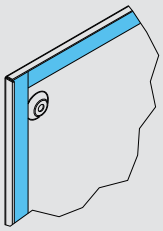

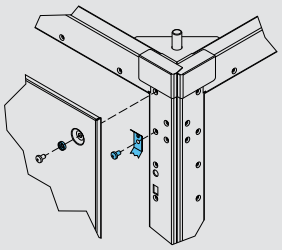

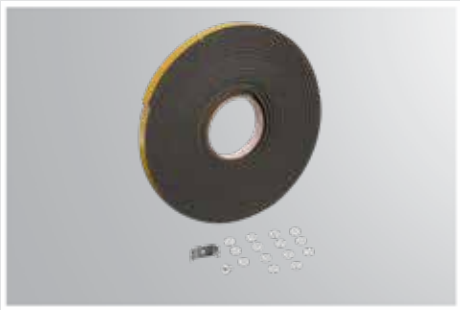

L series front and rear IP55 set

Enclosure Rated Height	Enclosure Rated Width	Order Code
2000	400	EL OAI Type 1
	500	EL OAI Type 1
	600	EL OAI Type 1
	700	EL OAI Type 1
	800	EL OAI Type 1
	500+500	EL OAI Type 2
	600+600	EL OAI Type 2

L Series Side Cover IP55 Set - EL YSI

It is used in cases when the protection class of L series enclosures is required to be IP55.

Content : 5x15 mm One side self-adhesive tape
Grounding clip
M5x8 Self-tapping screws
Sealing washer

Applicable Series EL

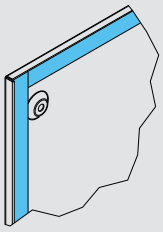

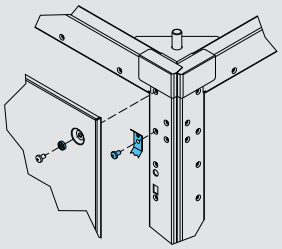

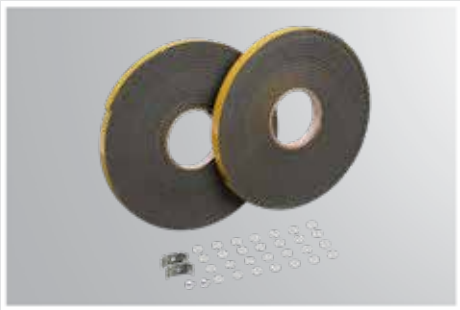

L series side cover IP55 set

Order Code	EL YSI

Unless otherwise specified, all dimensions are in mm.

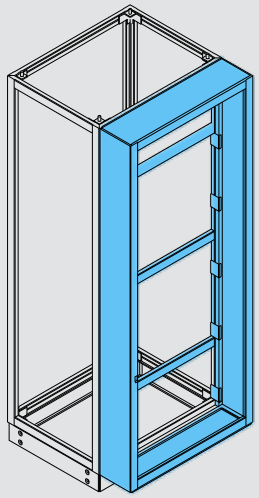

Cable Module - EG CM

It is designed to make easy the entry and exit of cables into the panel in the sections with cable density. With this product, the depth sizes of only the relevant panels will be expanded without increasing the depth of all panels.

Material : Galvanized steel sheet
Surface : Painted - body RAL 7035 (Grey Colour)
1 piece of Cable module welded frame
Content : 1 piece of Fittings set

Applicable Series ES ED

Cable module

Enclosure Rated Height	Enclosure Rated Width	Order Code	Enclosure Rated Height	Enclosure Rated Width	Order Code
2000	400	EG CM 2004	2200	400	EG CM 2204
2000	500	EG CM 2005	2200	500	EG CM 2205
2000	600	EG CM 2006	2200	600	EG CM 2206
2000	700	EG CM 2007	2200	700	EG CM 2207
2000	800	EG CM 2008	2200	800	EG CM 2208
2000	1000	EG CM 2010	2200	1000	EG CM 2210
2000	1200	EG CM 2012	2200	1200	EG CM 2212
2000	1400	EG CM 2014	2200	1400	EG CM 2214

Unless otherwise specified, all dimensions are in mm.

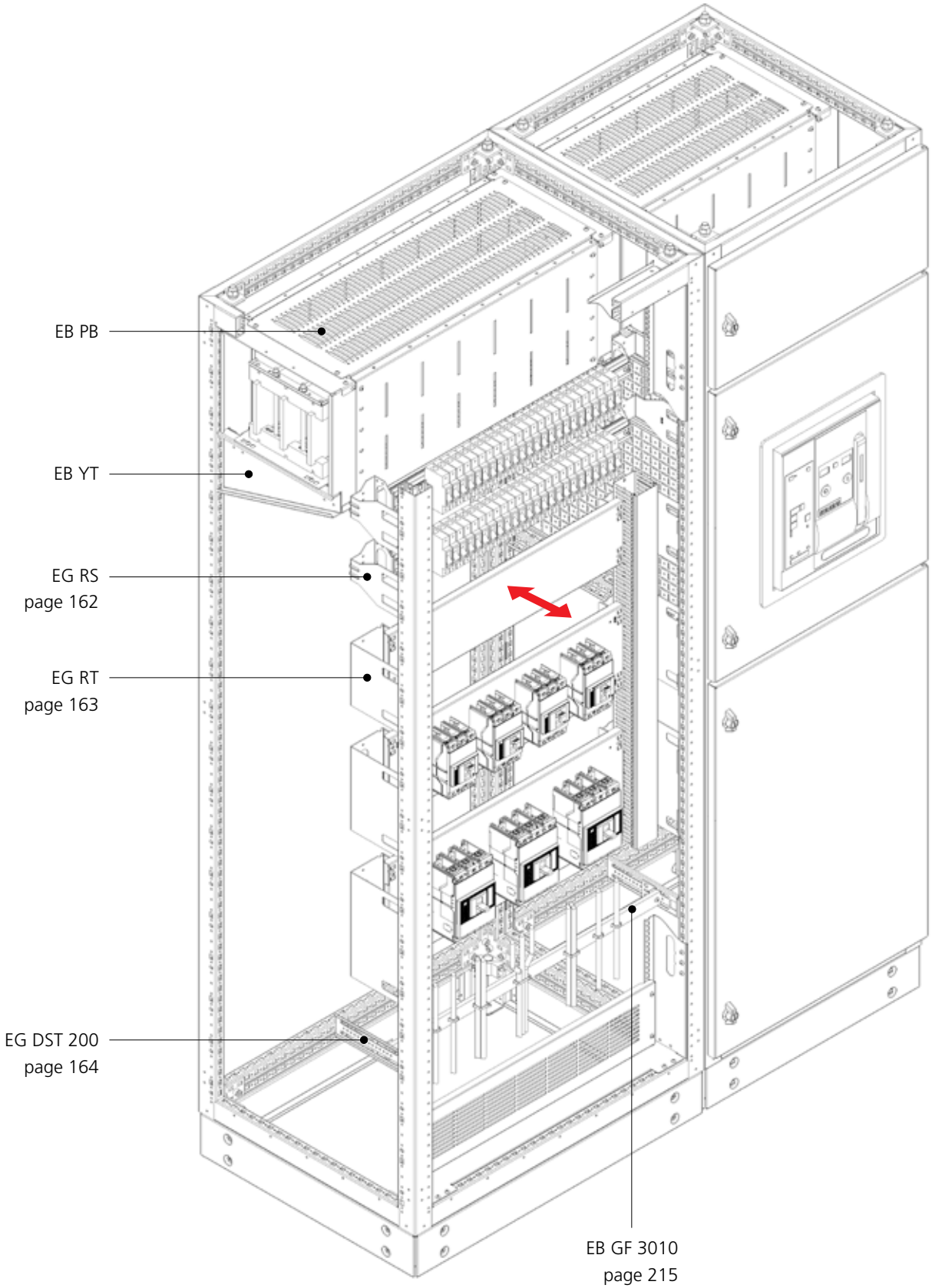
EB PB
EB YT
EG RS
page 162
EG RT
page 163
EG DST 200
page 164
EB GF 3010
page 215

EB GFG Support Insulator

Material	: Polyester with glass fiber reinforced Does not emit halogen gas when burned (Halogen free)
Properties	: Maximum effective short circuit current 50 kA Designed to be used with 5 mm and 10 mm thick busbars. Continous operation temperature max.130 °C Material CTI value 600 V Material group I
Rated insulation voltage	: Pollution degree III maximum 1000 V

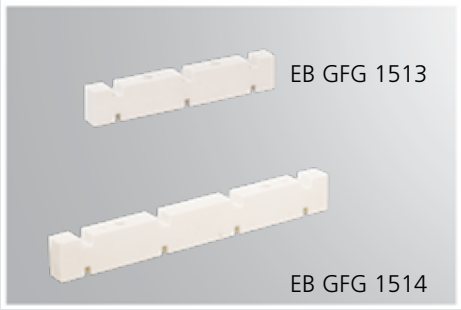

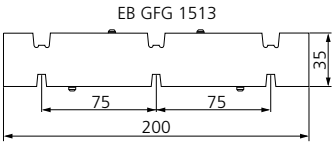

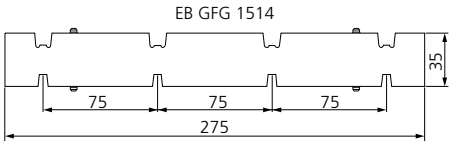

EB GT Insulator Set (Support Insulator Set)

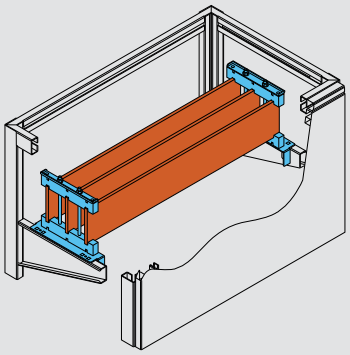

Content	: 4 pieces of EB GFG insulators 2 pieces of Fixing elements 2 pieces of Support elements 2 pieces of Threaded rod sets 2 pieces of Connection sets
Order Code	: EB GT 1513 - 3 poles : EB GT 1514 - 4 poles

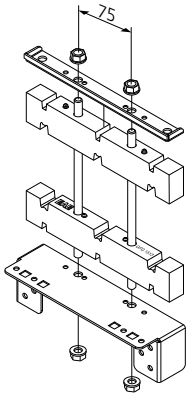

Sample Coding:

EB GT 15 1 3

- 15 – Copper Bar Thickness (5 mm & 10 mm)
- 1 – Copper Bar Quantity
- 3 – Pole Quantity

Note: EB GT insulator set shall be used with support rail.
The support rail is not included in the final product. Must be ordered separately.

EB GA Insulator Set (Intermediary Insulator Set)

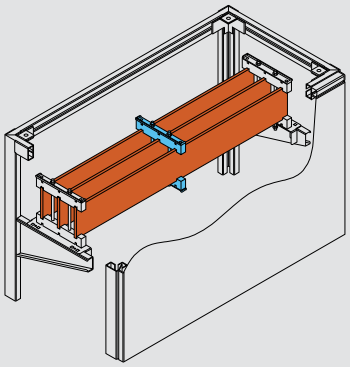

Content	: 2 pieces of EB GFG insulators 2 pieces of Support plate 1 pieces of Threaded rod set
Order Code	: EB GA 1513 - 3 poles : EB GA 1514 - 4 poles

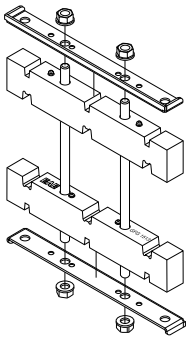

Sample Coding:

EB GA 15 1 3

- 15 – Copper Bar Thickness (5 mm & 10 mm)
- 1 – Copper Bar Quantity
- 3 – Pole Quantity

Note: EB GA insulator set is used without mounting profile.

Unless otherwise specified, all dimensions are in mm.

EB GFG Short Circuit Withstand Capacity

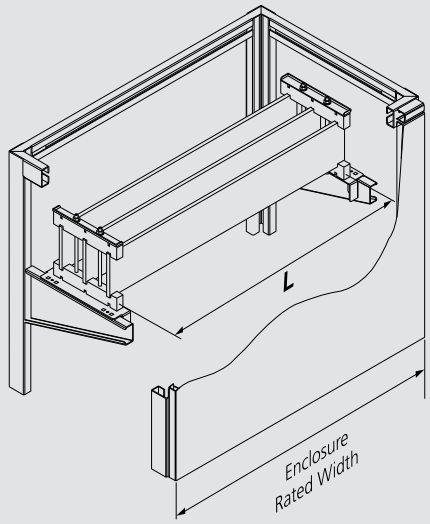

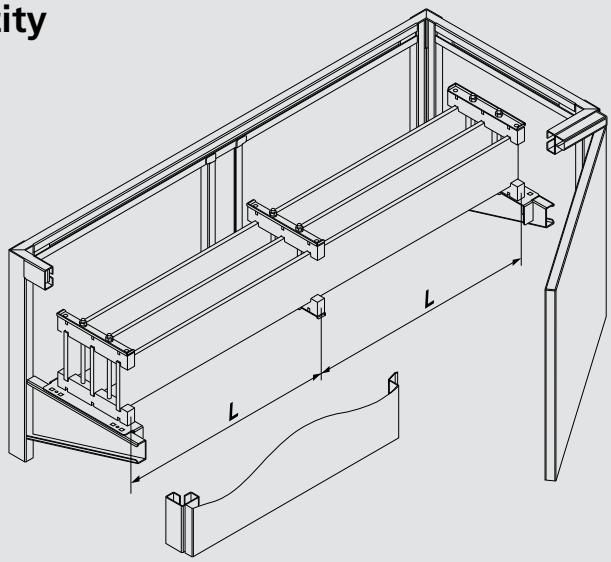

Enclosure Rated Width	Distance Between Insulators L (mm)	SUPPORT INSULATOR SHORT CIRCUIT WITHSTAND CURRENT - 1 s.						
		EB GFG 1513 - 1514						
		Busbar Cross-Sections (mm)						
		30x10	40x10	50x10	60x10	80x10	100x10	120x10
04	300	47 kA	50 kA	50 kA	50 kA	50 kA	50 kA	50 kA
05	400	41 kA	47 kA	50 kA	50 kA	50 kA	50 kA	50 kA
06	500	36 kA	42 kA	47 kA	50 kA	50 kA	50 kA	50 kA
07	600	33 kA	38 kA	43 kA	47 kA	50 kA	50 kA	50 kA
08	700	31 kA	35 kA	40 kA	43 kA	50 kA	50 kA	50 kA

Enclosure Rated Width	Distance Between Insulators L (mm)	SUPPORT INSULATOR SHORT CIRCUIT WITHSTAND CURRENT - 1 s.						
		EB GFG 1513 - 1514						
		Busbar Cross-Sections (mm)						
		30x5	40x5	50x5	60x5	80x5	100x5	120x5
04	300	23 kA	25 kA	28 kA	31 kA	35 kA	40 kA	43 kA
05	400	20 kA	23 kA	26 kA	29 kA	33 kA	37 kA	41 kA
06	500	18 kA	21 kA	23 kA	25 kA	29 kA	32 kA	35 kA
07	600	17 kA	19 kA	21 kA	23 kA	27 kA	30 kA	33 kA
08	700	15 kA	18 kA	20 kA	22 kA	25 kA	28 kA	31 kA

Unless otherwise specified, all dimensions are in mm.

EB PCG 1013 Support Insulator

Material	: Polycarbonate with glass fiber reinforced Does not emit halogen gas when burned (Halogen free)
Properties	: Maximum effective short circuit current 36 kA Designed to be used with 10 mm thick busbars. Continous operation temperature max.130 °C Material CTI value 175 V Material group IIIa
Rated insulation voltage	: Pollution degree III maximum 1000 V

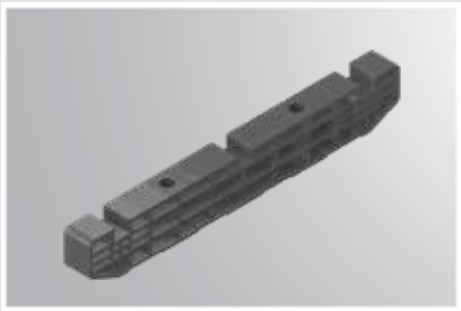

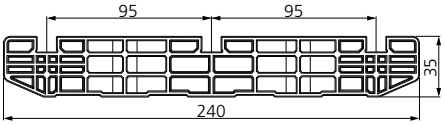

EB CT 1013 Insulator Set (Support Insulator Set)

Content	: 4 pieces of EB PCG 1013 insulators 2 pieces of Fixing elements 2 pieces of Threaded rod sets 2 pieces of Connection sets
Order Code	: EB CT 1013

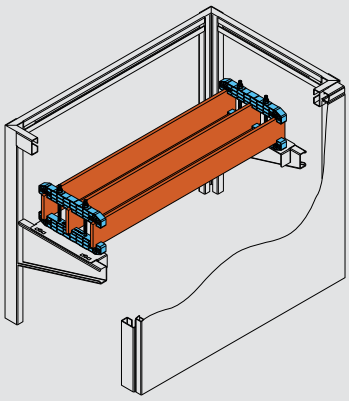

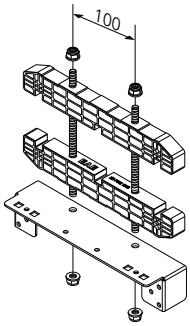

Note: EB GT insulator set shall be used with support rail.
The support rail is not included in the final product. Must be ordered separately.

EB CA 1013 Insulator Set (Intermediary Insulator Set)

Content	: 2 pieces of EB PCG 1013 insulators 1 pieces of Threaded rod sets
Order Code	: EB CA 1013

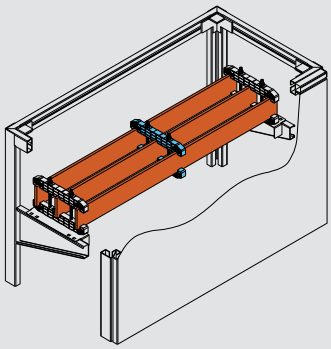

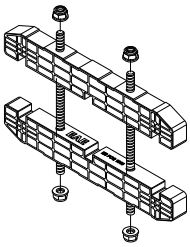

Note: EB CA insulator set is used without mounting profile.

Unless otherwise specified, all dimensions are in mm.

EB PCG Short Circuit Withstand Capacity

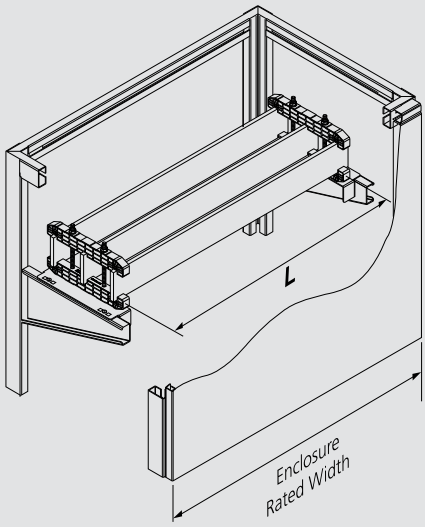

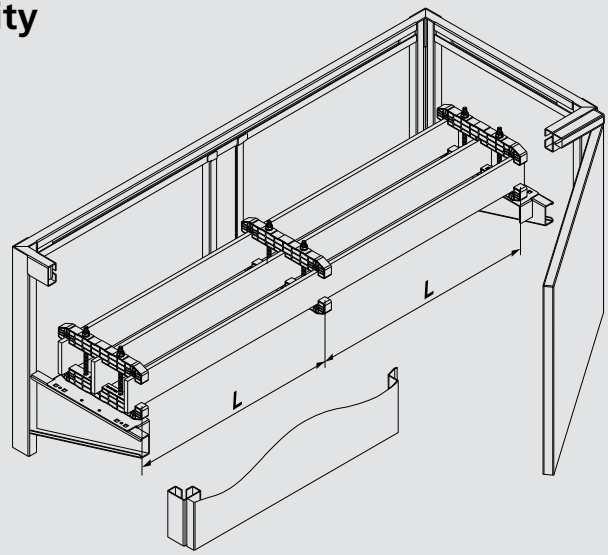

Enclosure Rated Width	Distance Between Insulators L (mm)	SUPPORT INSULATOR SHORT CIRCUIT WITHSTAND CURRENT - 1 s.						
		EB PCG 1013						
		Busbar Cross-Sections (mm)						
		30x10	40x10	50x10	60x10	80x10	100x10	120x10
04	300	31 kA	36 kA	36 kA	36 kA	36 kA	36 kA	36 kA
05	400	27 kA	31 kA	35 kA	36 kA	36 kA	36 kA	36 kA
06	500	24 kA	28 kA	31 kA	34 kA	36 kA	36 kA	36 kA
07	600	22 kA	25 kA	28 kA	31 kA	36 kA	36 kA	36 kA
08	700	20 kA	23 kA	26 kA	29 kA	33 kA	33 kA	33 kA

Unless otherwise specified, all dimensions are in mm.

EB PAG 1513 Support Insulator

Material	: Poliamid with glass fiber reinforced Does not emit halogen gas when burned (Halogen free)
Properties	: Maxsimum effective short circuit current 25 kA Designed to be used with 5 mm and 10 mm thick busbars. Continous operation temperature max.120 °C Material CTI value 375 V Material group IIIa
Rated insulation voltage	: Pollution degree III maximum 1000 V

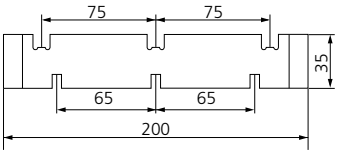

EB PT 1513 Insulator Set (Support Insulator Set)

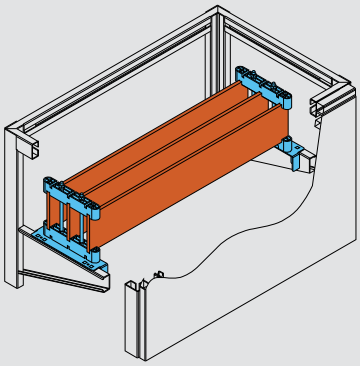

Content	: 4 pieces of EB PAG 1513 insulator 2 pieces of Mounting part 2 pieces of Threaded rod set 2 pieces of Connection set
Order Code	: EB PT 1513

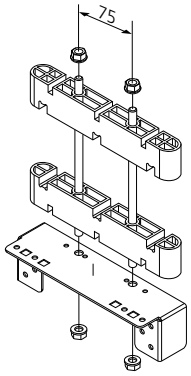

Note: EB AT insulator set is used together with support rail.
The support rail is not included in the final product. Must be ordered separately.

EB PE 1513 Insulator Set (Intermediary Insulator Set)

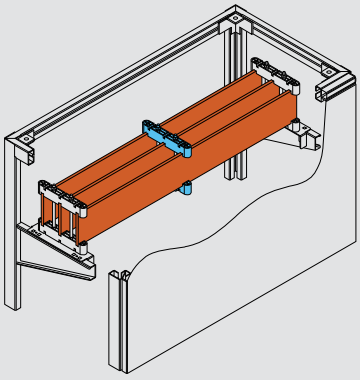

Content	: 2 pieces EB PAG 1513 insulator 1 pieces of Threaded rod set
Order Code	: EB PE 1513

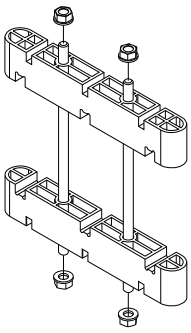

Note: EB PE insulator set is used without mounting rail.

Unless otherwise specified, all dimensions are in mm.

EB PAG Short Circuit Withstand Capacity

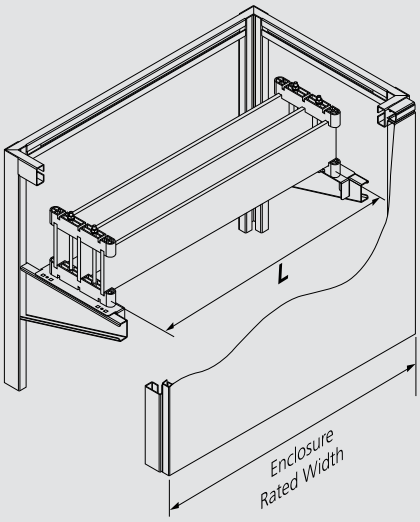

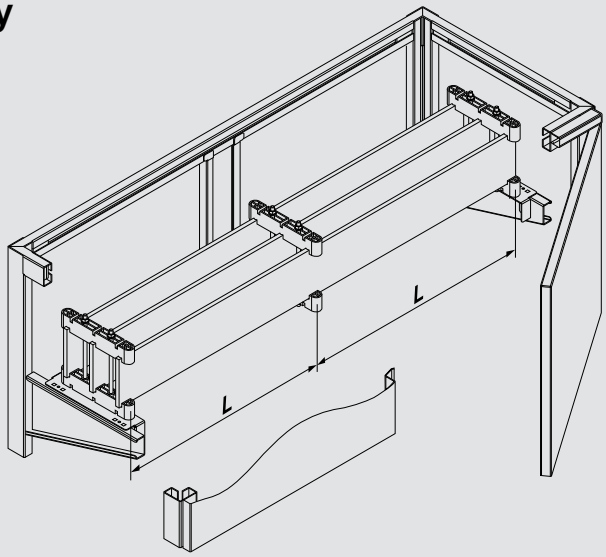

Enclosure Rated Width	Distance Between Insulators L (mm)	SUPPORT INSULATOR SHORT CIRCUIT WITHSTAND CURRENT - 1 s.						
		EB PAG 1513						
		Busbar Cross-Sections (mm)						
		30x10	40x10	50x10	60x10	80x10	100x10	120x10
04	300	25 kA	25 kA	25 kA	25 kA	25 kA	25 kA	25 kA
05	400	25 kA	25 kA	25 kA	25 kA	25 kA	25 kA	25 kA
06	500	25 kA	25 kA	25 kA	25 kA	25 kA	25 kA	25 kA
07	600	25 kA	25 kA	25 kA	25 kA	25 kA	25 kA	25 kA
08	700	25 kA	25 kA	25 kA	25 kA	25 kA	25 kA	25 kA

Enclosure Rated Width	Distance Between Insulators L (mm)	SUPPORT INSULATOR SHORT CIRCUIT WITHSTAND CURRENT - 1 s.						
		EB PAG 1513						
		Busbar Cross-Sections (mm)						
		30x5	40x5	50x5	60x5	80x5	100x5	120x5
04	300	19 kA	22 kA	25 kA	25 kA	25 kA	25 kA	25 kA
05	400	17 kA	19 kA	21 kA	23 kA	25 kA	25 kA	25 kA
06	500	15 kA	17 kA	19 kA	21 kA	25 kA	25 kA	25 kA
07	600	14 kA	16 kA	17 kA	19 kA	25 kA	25 kA	25 kA
08	700	13 kA	14 kA	16 kA	18 kA	25 kA	25 kA	25 kA

Unless otherwise specified, all dimensions are in mm.

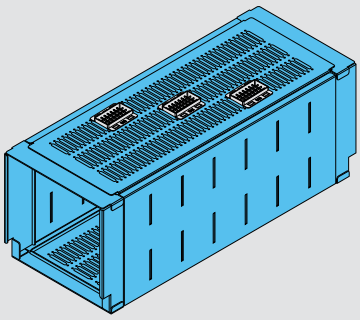

EB PB XX 1513 AA

EB PB Main Busbar Form of Separation

It includes parts to be used for the separation of main busbars. Front and back sides of the main busbar are separated, and the upper and lower parts can be changed depending on design preference. The bottom and top parts may be empty depending on the design and may be separated by aluminum or pre-galvanized material.

Available panel widths : 400, 500, 600, 700, 800, 1000, 1200, 1400

Order Code : EB PB XX 1513 00 (Bottom and top side empty)
EB PB XX 1513 G0 (Bottom side empty, top side pre-galvanised)
EB PB XX 1513 GG (Bottom and top sides pre-galvanised)
EB PB XX 1513 A0 (Bottom side empty, top side aluminum)
EB PB XX 1513 GA (Bottom side aluminum, top side pre-galvanised)
EB PB XX 1513 AA (Bottom and top sides aluminum)

EB PB XX 1514 00 (Bottom and top side empty)
EB PB XX 1514 G0 (Bottom side empty, top side pre-galvanised)
EB PB XX 1514 GG (Bottom and top sides pre-galvanised)
EB PB XX 1514 A0 (Bottom side empty, top side aluminum)
EB PB XX 1514 GA (Bottom side aluminum, top side pre-galvanised)
EB PB XX 1514 AA (Bottom and top sides aluminum)

Sample Coding:

EB PB 08 1513 GA

Panel Width — Insulator Type — Module Type

Note: EB PG insulator must be selected separately.

In what cases should aluminum be used?

Magnetic eddy currents and hysteresis losses can be significant where the use of conductors in AC circuits with a current rating exceeding 600 A pass through ferromagnetic enclosures, sections or plates.

A non-magnetic material such as aluminium can be used at higher current.

Steel materials ≤ 200 A

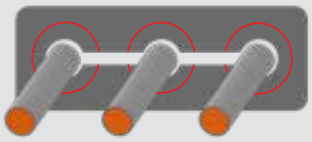

Steel materials ≈ 600 A

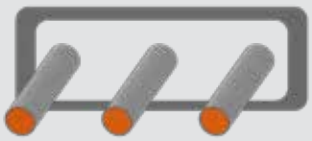

IEC TR 60890:2022 Annex J

Form 2b application example

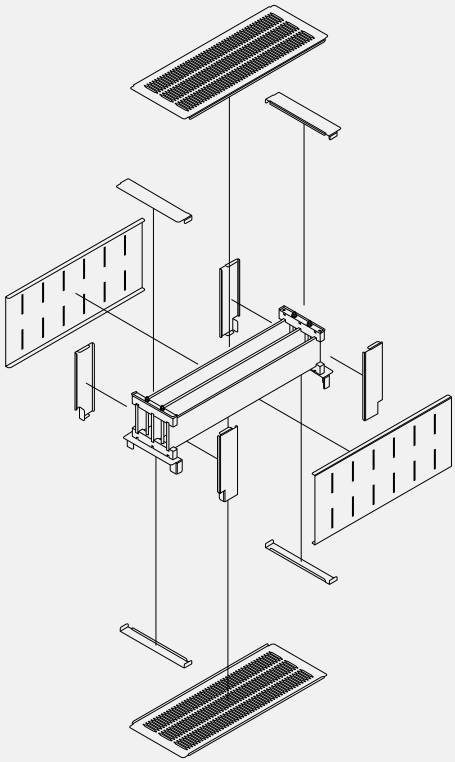

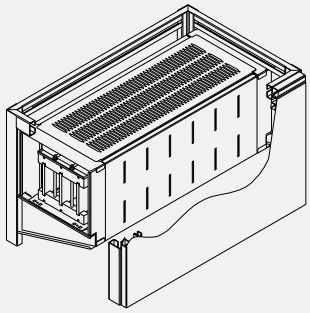

EB PB XX 1513 Side View

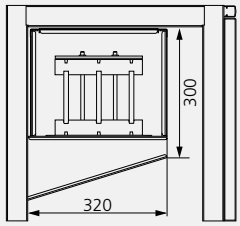

EB PB XX 1514 Side View

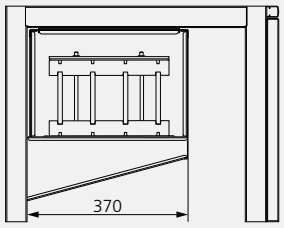

Note: It is suitable for busbars with a maximum height of 120 mm.

Unless otherwise specified, all dimensions are in mm.

EB RP Main Busbar Module Termination Set

If the main busbar terminates inside the panel, it is used at the depth of the module to prevent access to the live parts.

Material : Policarbonate
Order Code : EB RP 13 - 3 phase - suitable for EB PB 1513
: EB RP 14 - 4 phase - suitable for EB PB 1514

Sample Coding:
EB RP 13
Insulator Type

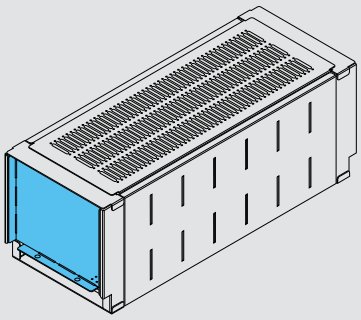

EB RP 13

EB PG Insulator Set

It can be used in the main busbar form set, which is closed at the top or bottom, so that the functional unit can be supplied from the main busbar.

Material : Plastic with rated thermal index 130 °C
Content : 10 pieces of insulators
Order Code : EB PG 10

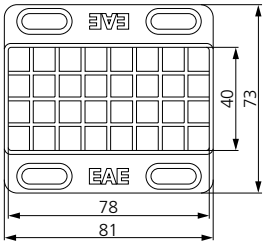

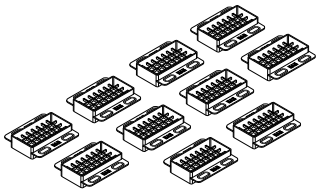

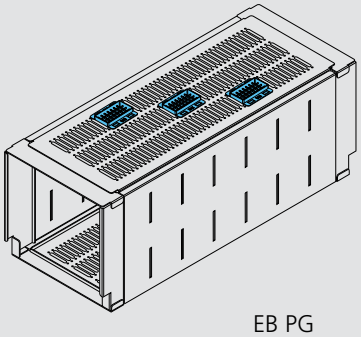

EB PG

EB YT Support Plate

It is designed as a support plate for EB GT, EB AT insulators.

Content : 1 piece of EB YTR support plate
1 piece of EB YTL support plate
2 piece of Connection set
Order Code : EB YT 3P (3 poles)
EB YT 4P (4 poles)

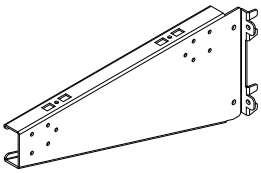

EB YTL - Sol

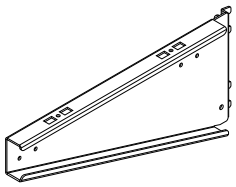

EB YTR - Sağ

EB YT 3P

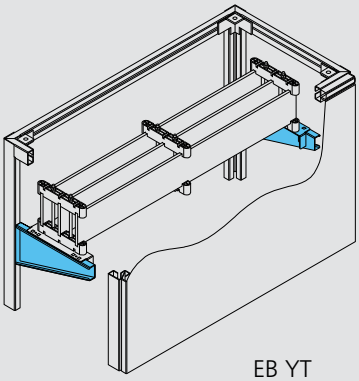

EB YT

Unless otherwise specified, all dimensions are in mm.

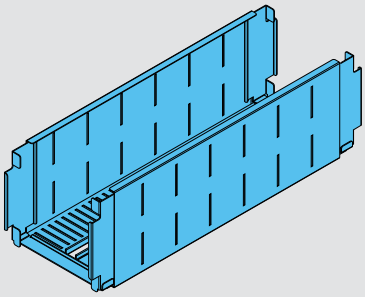

EB PD XX 1513

EB PD Bottom Separation Set Terms of Utilization

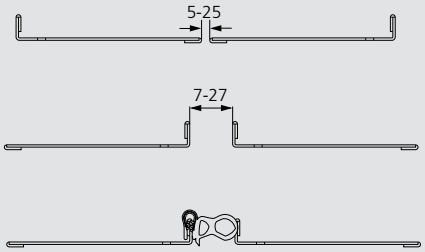

EB PD Main Busbar Form of Separation Set

It includes products to be used for separating main busbars (form of separation) in automation panels. All parts in its content are manufactured from pre-galvanized steel material. The front, back and bottom parts of the product are separated. It is used only at the top of the panel, there is no need to cover the top side separately. The product is available to use with EB GFG and EB PAG insulators. It can be used with a full-height mounting plate(200 mm shorter than the panel height).

Available panel widths : 400, 500, 600, 700, 800, 1000, 1200, 1400
Order Code : EB PD XX 1513
EB PD XX 1514

Sample Coding

EB PD 08 1513

Panel Width — Insulator Type

Note 1: This form of separation set is available to use with EG MC mounting rail and cannot be used with EB YT support profile.
Note 2: Suitable for a maximum 100 mm high busbar.

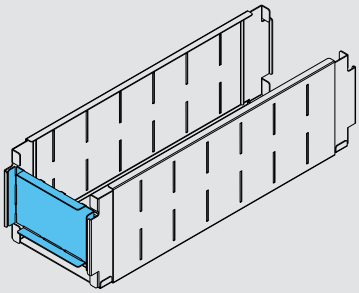

EB RD 13

EB RD Main Busbar Module Termination Set

If the main busbar terminates inside the panel, it is used at the depth of the moduleto prevent access to the live parts.

Material : Polycarbonate
Order Code : EB RD 13 - 3 phase - suitable for EB PD 1513
EB RD 14 - 4 phase - suitable for EB PD 1514

Sample Coding

EB RD 13

Insulator Type

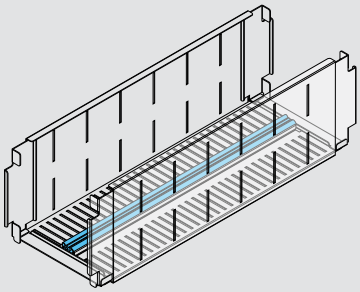

EB GC

EB GBushing Gasket

It is preferably suitable to ensure IP2X in cases where the main busbar bottom separation parts are fixed with a gap greater than 12 mm. The length of the product is 2.4 meters and can be used by cutting it.

Material : PVC/EPDM
Order Code : EB GC (2.4 m) bushing gasket

SCALE 1:1

Unless otherwise specified, all dimensions are in mm.

EB PD Sample Design

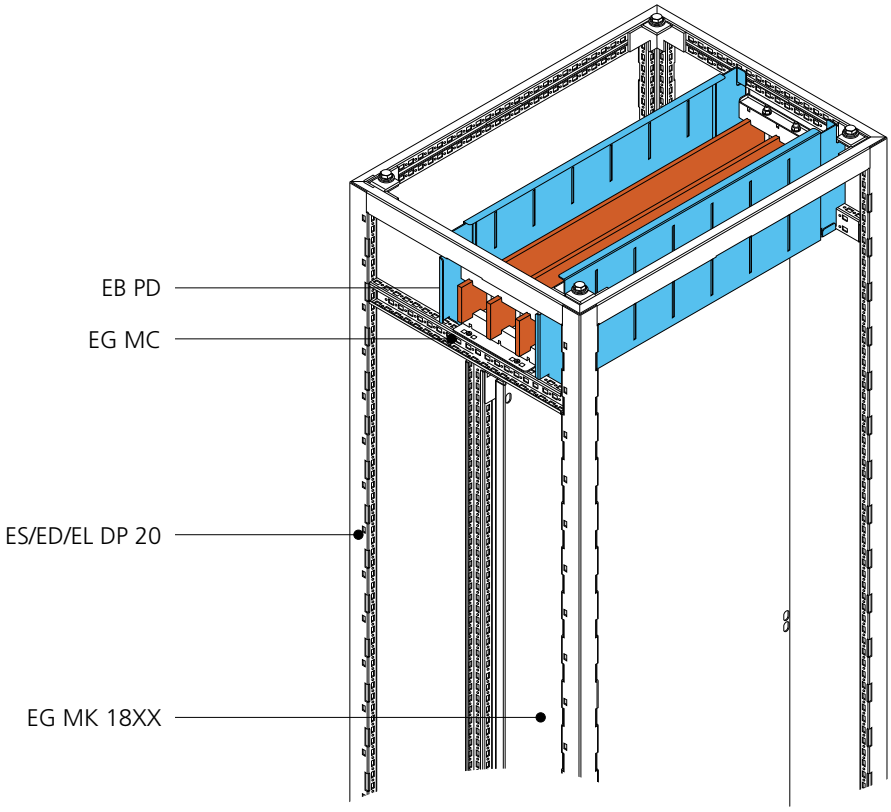

EB PD Form 2b application example

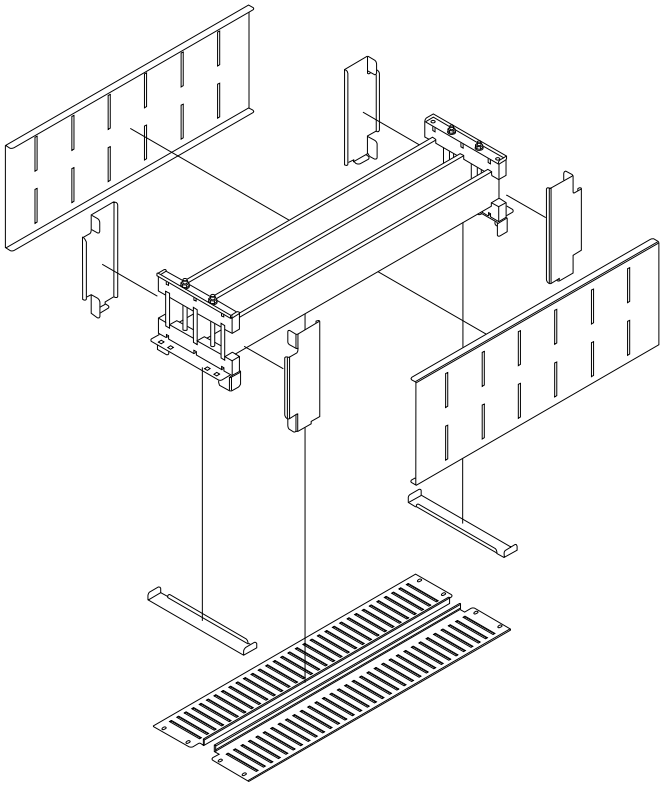

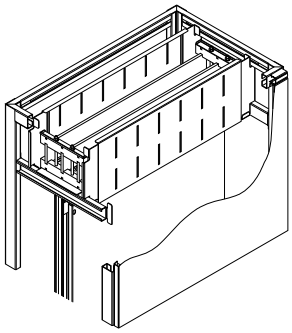

EB PD 1514

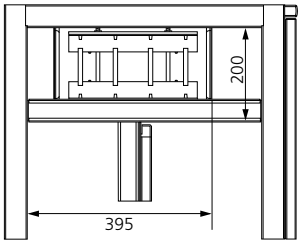

EB PD 1513

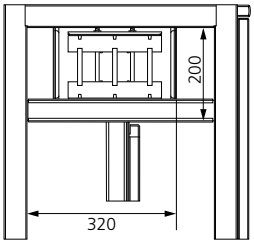

Unless otherwise specified, all dimensions are in mm.

EB IG Bolt Insulation Set

Suitable for 3-4 poles, M8-M12 bolts insulation.

Content : EB IG M12 N3;
6 piece of ZPG M12
6 piece of IPG M12

Order Code: : EB IG M12 N3 (3 poles, M12 bolt)
EB IG M12 N4 (4 poles, M12 bolt)
EB IG M8 N3 (3 poles, M8 bolt)
EB IG M8 N4 (4 poles, M8 bolt)

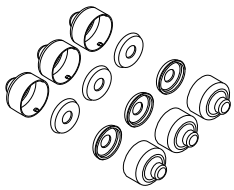

EB IG M12 N3 Product content

EB TL Separator Set

Suitable for 3-4 poles, 30-50 mm busbar cross-section.

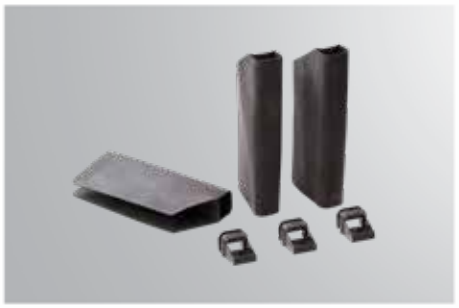

Content : EB TL 330;
3 piece of BTI 30
3 piece of BTS 30

Order Code : EB TL 330 (3 poles, for 30 mm wide coppeer bar)
EB TL 430 (4 poles, for 30 mm wide coppeer bar)
EB TL 350 (3 poles, for 30 mm wide coppeer bar)
EB TL 450 (4 poles, for 50 mm wide coppeer bar)

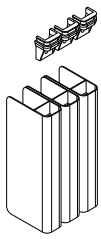

EB TL 330 Product content

EB KR Cable Fixing Crochet

It is used for fastening and fixing cable harness. It can easily mounted with the help of screws or bolts.

Content : 100 pieces of crochets
Order Code : EB KR 8G5 HS BLACK 100

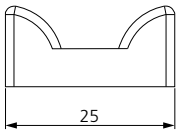

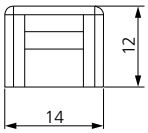

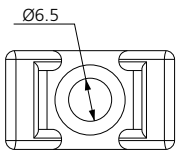

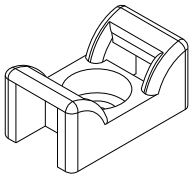

For what purpose should seperators be used?
Bare conductors or single-core conductors with basic insulation which is used in switchgear main circuits Mutual contact or contact with conductive parts shall be avoided, for example by use of spacers.

IEC 61439-1:2020 Table-4

Unless otherwise specified, all dimensions are in mm.

EB GF 3010 Insulator

It is used to support the interconnection coppers of circuit breakers.

Content : 1 meter long glass fiber reinforced insulator

Order Code : EB GF 3010

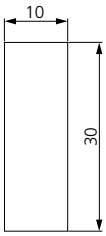

Note: The product package includes 1 insulator.
It is suitable to use by cutting it into appropriate sizes.

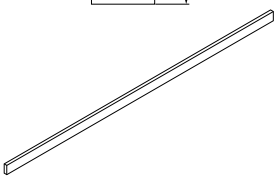

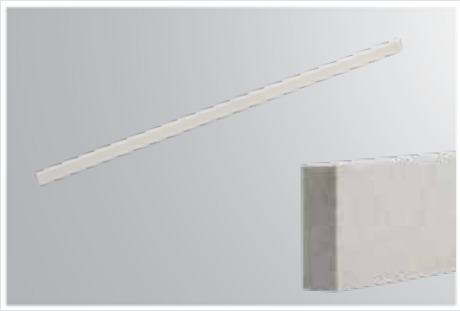

EB GF 2510 Insulator

It is used to support the interconnection coppers of circuit breakers.

Content : 1 meter long glass fiber reinforced insulator

Order Code : EB GF 2510

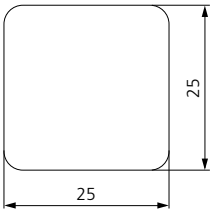

Note: The product package includes 1 insulator.
It is suitable to use by cutting it into appropriate sizes.

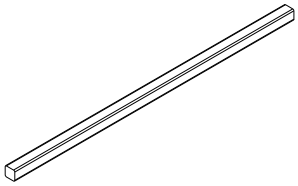

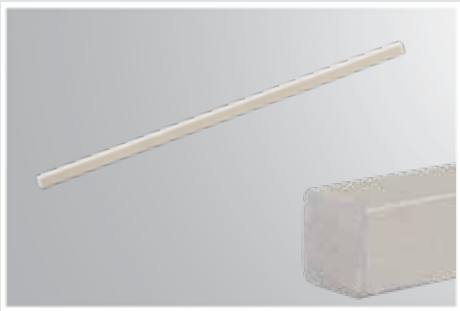

EB BR Belleville Washer

Content : 250 pieces of Belleville Washers
Order Code : EB BR M6 250
EB BR M8 250
EB BR M10 250
EB BR M12 250

DIN 6796 Belleville Washers

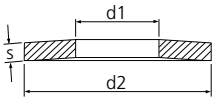

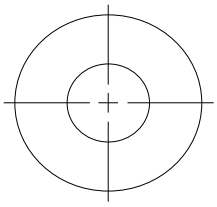

	M6	M8	M10	M12
d1	6,4	8,4	10,5	13
d2	14	18	23	29
s	1,5	2	2,5	3

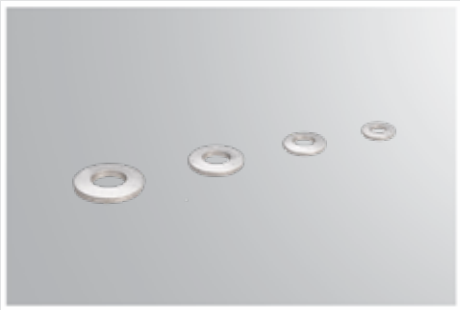

Unless otherwise specified, all dimensions are in mm.

TECHNICAL INFORMATION

Forced ventilation airflow calculation according to IEC 61439-2

Verification of the temperature-rise of an assembly with active cooling (e.g., forced cooling, internal air conditioning, heat exchanger, etc.) and a total supply current not exceeding 1 600 A may be made by calculation.

Calculation procedure

1) Calculate the permissible air temperature-rise inside the assembly by subtracting the maximum ambient air temperature outside the assembly from the lowest permissible maximum operating air temperature of all devices and components installed in the assembly as declared by the device manufacturer.

2) Determine the total effective power loss as explained in 10.10.4.1 of IEC 61439-1:2020. The effective power losses of all circuits including interconnecting conductors shall be calculated assuming the circuits are operating at their group rated current.

3) Calculate the maximum power loss the assembly enclosure can dissipate without ventilation and active cooling by using the method given in IEC TR 60890 or the enclosure manufacturer's declared power dissipation data.

4) Determine the power to be dissipated by active cooling by subtracting the maximum power loss the enclosure can dissipate without ventilation and active cooling from the total effective power loss.

5) From the cooling equipment manufacturer's data, determine the cooling equipment required (e.g., a fan) to ensure that the power to be dissipated by the active cooling can be removed by the active cooling without the air temperature-rise inside the enclosure exceeding the permissible maximum value.

Forced ventilation airflow calculation

$$V_{min} = \frac{P - P_{890}}{1160 \cdot k \cdot (T_{int,max} - T_a)} \; [m^3/s] = 3{,}1 \cdot \frac{P_{loss} - P_{enclosure}}{k \cdot (T_{int,max} - T_a)} \; [m^3/h]$$

P_{loss}, P : Total installed power losses inside the enclosure $[W]$

$P_{enclosure}, P_{890}$: Calculated power dissipation of the enclosure $[W]$

T_{int} : Temperature inside the enclosure in °C

T_a : Ambient temperature in °C

V_{min} : Minimum flow rate $[m^3/h]$

k : Factor for altitudes above sea level

$$\frac{1}{1160}\left[\frac{m^3 \cdot K}{J}\right] = \frac{1}{1160}\left[\frac{m^3 \cdot K}{W \cdot s}\right] = 3{,}1\left[\frac{m^3 \cdot K}{W \cdot h}\right]$$

Table-1: Factor k for altitudes above sea level

Height (m)	0	500	1000	1500	2000	2500	3000
k	1.00	0.95	0.89	0.84	0.80	0.75	0.71

From calculated airflow rate to fan airflow rate selection

It is essential to take care how to select the correct fan. In general fans are usually described by two different properties. The first-one is its performance in case of free air flow, and the second-one is given in case of working against a load, for example, a grille or a filter. This second value, which is the lower one, shall be used to select the correct fan.

Performance curve of a sample fan

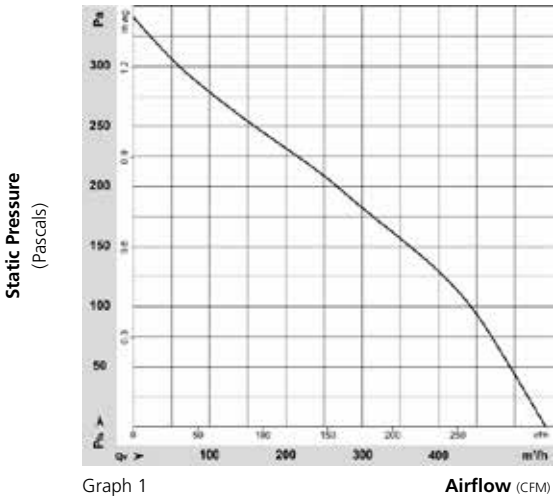

Graph 1

Performance curve of same sample fan intersect with two different impedance curve showing actual airflow at two different working conditions

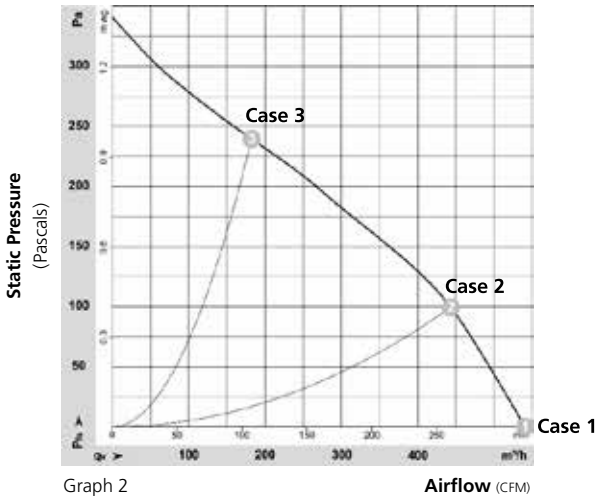

Graph 2

Care must be taken that there is no horizontal partition or other obstruction in the assembly or a section of an assembly that restricts the air flow. To avoid hot spots, adequate air circulation of the active components must be ensured in the assembly.

Sample performance curve of a imaginary fan with filter;

Point 1 - Sample 540 m^3/h rated fan has a performance curve that intersect with horizontal airflow axe at 540 m^3/h where static pressure is zero, which means air is flowing without resistance.

Point 2 - This fan is placed in a fan unit and mounted on top of a fully equipped assembly; which means air is flowing with resistance at 445 m^3/h

Point 3 - After 6 months the airflow rate of this fan unit with filter (if it's filter mat is not kept clean) is reduced to 180 m^3/h

Case	Status	Fan Flow Rate (m^3/h)
1	Only fan is operating. There is no obstacle or resistance.	540
2	The situation after devices are placed in the enclosure	445
3	Situation after filters are installed	180

Use of forced ventilation requires maintenance to ensure consistent performance during the whole life of the assembly. Fan with filter units are ideal for dissipating heat loads cost effectively. The prerequisite is that the ambient air must be relatively clean. Otherwise, filters are filled with contamination very quickly. Filter mats must be cleaned and/or replaced regularly.

Measured cooling capacities

Table-2: Measured fan cooling capacities

T_a : 25 °C	35°C	40°C	45°C	50°C	55°C	60°C	65°C
T_{int} - T_a = Temperature difference	10K	15K	20K	25K	30K	35K	40K
EG FM Roof Top Fan-with D3 Door	475 W	712 W	950 W	1187 W	1425 W	1662 W	1900 W
EG FM Roof Top Fan-with D1 Door	457 W	685 W	914 W	1142 W	1371 W	1600 W	1828 W

Installation considerations

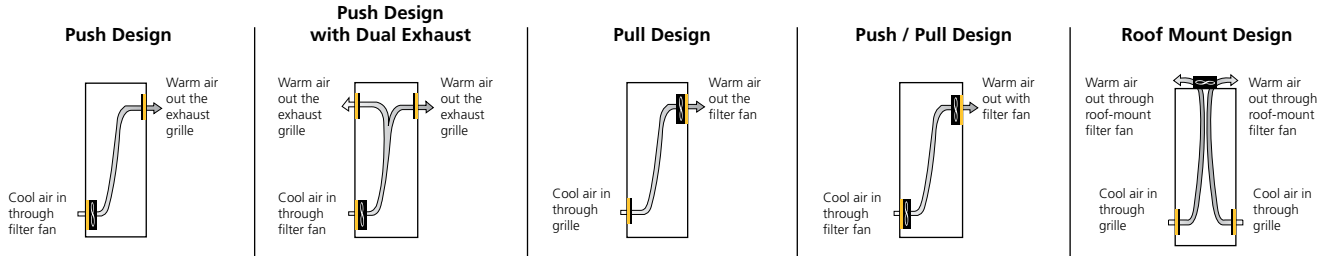

A typical application. Pressurizes cabinet to help keep out dust.

An extra exhaust grille is added to improve air flow and cooling.

Pull design is less desirable because dust can be sucked inside the cabinet.

Push/pull is used to increase air flow through more tightly packed cabinets.

Roof mount filter fans save space inside the cabinet.

Filter fans are typically installed using a "Push Design"

Designers of assemblies using forced ventilation need to recognize there can be 'grey areas' within the assembly where the airflow is adversely affected by the forced cooling. The installation of temperature-critical devices within these spaces shall be avoided (see Figure 1a)). The place of installation and the direction of the air flow, e.g., pushing air into or sucking air out of the enclosure, can lead to different results. In case of installing the fan at the top of the enclosure, to blow air out (see Figure 1b)), because the enclosures are usually not completely air-tight gaps, or some small holes can modify the air-forced circulation. This effect may reduce the cooling in some areas of the enclosure (see Figure 1b)). Another known consequence is that some polluted (unfiltered) air is drawn into the enclosure through these gaps. Based on those facts, the pushed-in air flow design with the fan placed at the bottom of the enclosure is the preferable solution in many cases (See Figure 1c).

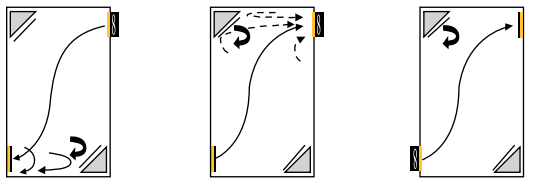

a) Top-fitted fan (1) b) Top-fitted fan (2) c) Bottom-fitted fan

Key

Grey-filled zone	"grey" area
Solid arrow	air circulation
Dashed arrow	gaps, holes additional air intrance
Ticked arrow	air re-circulation

Figure 1 - Examples of forced ventilation arrangements

Fan airflow calculation example

Total effective power loss (P) : 1161 [W]
Enclosure dimensions (HxWxD) : 2000x800x500 mm
Type of installation of enclosure : Separate enclosure, detached on all sides
T_{int} : 45 °C ; T_a : 25 °C ; P_{890} : 264 [W] (From Table-3); Altitude : 100 [m]

Table-3: Power dissipated by separate enclosure, detached on all sides (T_a = 25°)

separate enclosure detached on all sides

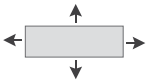

Target temperature	40°C	45°C	50°C	55°C	60°C	65°C
T_{int} - T_a = Temperature difference	15K	20K	25K	30K	35K	40K
E-Kabin 20 06 05	157 W	225 W	297 W	372 W	451 W	532 W
E-Kabin 20 08 05	185 W	264 W	349 W	438 W	531 W	626 W
E-Kabin 20 66 05	247 W	354 W	467 W	585 W	710 W	837 W

Calculation of minimum flow rate of the fan:

$$V_{min} = 3{,}1 \cdot \frac{P - P_{890}}{k \cdot (T_{int,max} - T_a)} = 3{,}1 \cdot \frac{1161-264}{1 \cdot (45-25)} = 139{,}035\ [m^3/h]$$

Important Note

Integral cooling fans of equipment like motor drives, power supplies, etc. positioned inside an assembly can help achieve homogeneous temperature distribution. They have limited effect on heat removal from that assembly. In such cases additional measures (like roof top fan and filter unit) to prevent excessive temperature-rise shall be considered.

E-Kabin products cooling power values

			Maximum Power Distribution (W)						Maximum Power Distribution (W)						Maximum Power Distribution (W)						Maximum Power Distribution (W)						Maximum Power Distribution (W)						Maximum Power Distribution (W)					
H (mm)	W (mm)	D (mm)	15 K	20 K	25 K	30 K	35 K	40 K	15 K	20 K	25 K	30 K	35 K	40 K	15 K	20 K	25 K	30 K	35 K	40 K	15 K	20 K	25 K	30 K	35 K	40 K	15 K	20 K	25 K	30 K	35 K	40 K	15 K	20 K	25 K	30 K	35 K	40 K
1800	300	400	73	105	138	173	210	248	63	91	120	150	182	215	60	86	114	142	172	204	54	77	102	128	155	183	51	73	96	120	146	172	46	66	87	110	133	157
1800	300	500	92	132	174	219	265	313	85	121	160	201	243	287	78	112	148	185	224	265	68	97	129	161	195	231	63	90	118	148	180	212	56	80	106	133	161	191
1800	300	600	106	151	199	250	303	357	104	149	197	247	299	354	93	133	176	221	268	316	87	124	164	206	250	295	74	106	140	176	213	252	68	98	129	162	196	231
1800	300	700	124	177	234	293	355	419	120	171	226	283	343	405	107	153	202	253	307	362	103	147	195	244	296	349	88	126	166	208	252	298	81	116	153	192	232	274
1800	300	800	143	205	271	340	411	486	137	196	259	324	393	464	120	172	227	285	346	408	114	163	216	270	328	387	100	143	189	237	287	339	95	136	179	225	272	322
1800	300	900	157	225	297	373	452	533	153	219	289	363	440	519	135	193	255	320	387	457	131	187	247	310	375	443	112	160	211	265	321	379	108	154	203	255	309	365
1800	300	1000	165	236	312	391	474	560	165	236	311	390	473	558	151	216	285	358	434	512	146	209	276	346	419	495	118	169	223	280	339	400	114	166	217	273	332	390
1800	400	400	94	135	178	223	270	319	83	119	158	198	239	283	82	118	155	195	236	278	70	100	132	166	201	238	69	99	130	164	198	234	61	87	114	144	174	205
1800	400	500	107	153	202	254	308	363	106	151	199	250	303	357	100	143	189	237	287	339	90	128	169	212	257	303	85	122	161	202	245	289	73	104	138	173	209	247
1800	400	600	129	184	243	304	369	435	120	172	227	285	345	407	111	159	210	263	319	377	108	154	203	255	309	364	98	141	186	233	283	334	90	129	171	214	259	306
1800	400	700	149	213	281	352	427	504	139	199	263	330	400	472	129	185	244	306	371	438	119	170	225	282	342	404	112	160	211	265	321	379	104	149	196	246	298	352
1800	400	800	164	234	309	387	469	554	158	226	298	374	453	535	145	208	274	344	416	492	138	197	260	327	396	467	120	171	226	283	343	405	115	162	213	263	332	390
1800	400	900	171	245	324	406	492	581	171	244	322	404	489	578	160	229	302	379	459	542	156	223	294	368	446	527	135	194	255	320	388	458	128	183	241	302	366	433
1800	400	1000	185	264	349	438	530	626	182	260	343	431	522	616	171	244	322	404	490	578	168	241	318	398	483	570	148	212	280	351	425	502	143	205	270	339	410	485
1800	500	400	107	153	202	254	308	363	102	145	192	241	292	344	104	149	196	246	298	352	90	128	169	212	257	303	91	131	173	217	262	310	77	110	146	183	221	261
1800	500	500	131	187	247	309	375	443	118	168	222	279	337	398	116	165	218	274	332	392	109	157	207	259	314	371	108	154	203	255	309	365	95	136	179	224	272	321
1800	500	600	152	217	287	360	436	514	139	199	263	330	399	471	134	192	254	318	386	455	121	173	229	287	348	411	117	167	220	276	335	395	111	158	209	262	318	375
1800	500	700	165	237	312	392	475	560	160	229	302	379	459	542	154	220	290	364	441	521	142	202	267	335	406	480	133	190	251	314	381	450	125	178	235	295	358	422
1800	500	800	176	252	333	418	506	597	174	249	328	412	499	589	165	236	311	391	473	559	160	229	302	379	460	543	147	210	277	348	421	497	137	196	259	325	394	465
1800	500	900	191	273	360	452	547	646	186	266	351	440	533	629	175	250	330	415	502	593	174	248	328	411	498	588	163	233	308	386	468	552	153	219	289	363	439	519
1800	500	1000	207	296	390	490	593	700	201	287	379	476	576	680	187	267	353	442	536	633	185	264	348	437	529	625	173	247	326	410	496	586	170	242	320	401	486	574
1800	600	400	129	184	243	304	369	435	113	162	213	268	324	383	118	169	223	280	339	401	108	154	203	255	309	364	110	158	209	262	317	374	96	138	182	228	276	326
1800	600	500	152	217	287	360	436	514	136	195	257	322	390	461	138	197	260	326	394	466	121	173	229	287	348	411	123	176	232	292	353	417	115	164	217	272	330	389
1800	600	600	166	238	314	393	476	563	159	228	301	378	457	540	158	226	298	374	453	534	143	205	270	339	410	484	140	200	263	330	400	473	127	181	239	300	364	430
1800	600	700	179	256	338	424	513	606	176	251	331	416	504	595	172	246	325	408	494	583	164	234	309	387	469	554	157	224	296	372	450	532	145	207	273	343	415	490
1800	600	800	194	277	366	459	557	657	187	267	353	443	536	633	181	259	341	428	519	613	178	255	336	422	511	603	170	243	321	403	488	576	160	229	303	380	460	543
1800	600	900	212	303	399	501	607	717	203	291	384	481	583	688	193	276	364	457	554	654	188	269	355	446	540	637	183	262	346	434	526	621	173	248	328	418	510	600
1800	600	1000	230	329	434	545	660	779	220	315	415	521	631	745	208	297	392	492	596	704	202	289	382	479	580	685	189	270	356	447	542	640	181	260	343	437	534	628
1800	700	400	149	213	281	352	427	504	130	186	246	309	374	442	138	198	261	327	396	468	119	170	225	282	342	404	128	183	241	302	366	432	116	165	218	274	332	392
1800	700	500	165	237	312	392	475	560	156	223	294	369	447	528	158	226	298	374	453	534	142	202	267	335	406	480	145	207	274	343	416	491	128	183	241	302	366	432
1800	700	600	179	256	338	424	513	606	173	247	326	409	496	586	174	249	329	413	500	590	164	234	309	387	469	554	164	234	309	387	469	554	148	211	279	350	424	500
1800	700	700	195	279	369	463	560	662	186	266	351	441	534	630	183	262	345	433	525	619	181	258	340	427	517	610	179	257	339	425	515	608	166	237	313	393	476	562
1800	700	800	213	305	403	505	612	723	203	290	383	480	581	687	197	282	372	466	565	667	190	272	359	450	545	644	185	264	348	437	530	625	179	258	340	427	510	605
1800	700	900	232	331	437	549	665	785	220	314	415	520	630	744	212	304	401	503	610	720	205	293	386	484	587	693	195	279	368	461	559	660	184	263	347	435	527	622
1800	700	1000	244	349	461	579	701	828	242	346	456	572	693	819	229	327	432	541	656	774	219	313	413	519	628	742	207	297	391	491	595	702	205	293	387	485	588	694
1800	800	400	164	234	309	387	469	554	148	211	279	350	424	500	155	222	293	368	445	526	138	197	260	327	396	467	148	211	279	350	424	500	126	180	238	298	362	427
1800	800	500	176	252	333	418	506	597	168	240	317	398	482	569	171	244	322	405	490	579	160	229	302	379	460	543	165	235	311	390	472	557	148	212	279	350	424	501
1800	800	600	194	277	366	459	557	657	183	262	346	434	526	621	184	263	347	435	527	622	176	250	330	415	505	600	179	256	338	425	514	607	168	240	317	398	482	569
1800	800	700	213	305	403	505	612	723	200	286	378	474	574	678	201	287	379	475	575	679	190	272	359	450	545	644	192	274	362	455	550	649	187	267	353	442	536	633
1800	800	800	233	333	440	552	669	789	219	313	413	518	628	741	216	309	408	512	621	733	206	294	388	487	590	697	200	286	378	474	574	678	196	280	369	463	562	663
1800	800	900	246	352	464	582	706	833	241	345	456	572	692	817	233	334	441	553	670	791	221	316	417	523	634	748	214	307	405	508	615	726	209	298	394	494	599	707
1800	800	1000	261	373	492	617	748	883	255	365	482	604	732	864	249	355	469	589	713	842	237	339	447	561	679	802	227	324	428	537	651	768	220	315	416	522	632	746
1800	1000	400	185	264	349	438	530	626	174	248	328	411	498	588	179	255	337	423	512	605	168	241	318	398	483	570	175	250	330	414	501	592	165	235	311	390	472	557
1800	1000	500	207	296	390	490	593	700	190	272	359	451	546	644	197	282	372	467	566	668	185	264	348	437	529	625	190	272	359	451	546	644	183	262	346	434	526	621
1800	1000	600	230	329	434	545	660	779	210	300	397	497	603	711	218	311	411	515	624	737	202	289	382	479	580	685	206	294	388	487	590	696	200	285	377	472	572	676
1800	1000	700	244	349	461	579	701	828	233	333	439	551	667	788	238	340	448	563	681	805	219	313	413	519	628	742	222	317	419	525	637	752	211	302	399	501	607	716
1800	1000	800	261	373	492	617	748	883	251	359	474	594	720	850	254	363	479	600	727	859	237	339	447	561	679	802	238	341	450	564	684	807	225	322	425	534	646	763
1800	1000	900	277	396	522	655	794	937	265	379	500	627	760	897	265	379	500	628	760	898	256	366	483	605	733	866	256	367	484	606	735	867	240	343	452	567	687	812
1800	1000	1000	292	418	552	693	839	990	280	401	529	664	804	949	278	397	524	657	796	940	267	382	504	633	766	905	262	375	494	620	751	887	255	364	481	603	731	863
1800	1200	400	216	309	407	511	619	731	193	276	365	457	554	654	207	296	391	491	594	702	189	270	356	446	541	639	202	289	381	478	579	684	177	254	335	420	509	601
1800	1200	500	237	339	447	561	679	802	216	309	408	512	620	732	233	333	439	551	668	788	210	300	396	497	602	711	221	316	417	524	634	749	207	296	391	491	595	702
1800	1200	600	254	363	479	601	728	859	243	347	458	575	696	822	248	355	468	588	712	840	230	329	434	544	659	778	243	347	458	575	696	822	224	320	422	530	642	757
1800	1200	700	272	389	513	644	780	921	258	369	488	612	741	875	264	378	498	625	757	894	251	359	474	594	720	850	255	365	481	604	731	864	240	343	453	568	688	813
1800	1200	800	290	414	547	686	831	981	274	392	517	649	786	928	279	398	526	660	799	944	265	378	500	627	759	896	266	381	503	631	764	902	257	368	485	609	738	871
1800	1200	900	308	441	582	730	884	1044	291	416	549	688	834	984	294	420	555	696	843	995	278	398	526	659	799	943	279	399	526	660	800	944	273	391	516	647	784	926
1800	1200	1000	328	469	618	776	940	1110	308	440	581	729	883	1043	309	442	584	732	887	1047	292	418	552	692	838	990	295	420	553	695	841	993	286	409	539	677	820	968
2000	300	400	79	113	149	187	227	268	72	103	136	171	207	244	67	96	127	160	193	228	59	84	111	140	169	200	55	79	104	131	158	187	49	70	92	116	140	166
2000	300	500	97	139	183	230	279	329	94	134	177	222	269	318	85	122	161	202	244	288	78	112	148	185	225	265	69	98	130	163	197	232	62	89	117	147	178	210
2000	300	600	116	167	220	276	334	395	109	156	206	259	313	370	101	144	190	239	289	341	95	136	180	226	273	323	83	119	158	198	239	283	75	107	142	178	215	254
2000	300	700	137	196	258	324	393	464	129	185	244	306	371	438	115	165	218	273	331	391	109	155	205	257	312	368	97	139	183	229	278	328	90	129	171	214	259	306
2000	300	800	150	215	283	356	431	508	147	210	278	348	422	498	130	187	246	309	374	442	125	179	236	296	359	423	108	155	204	256	310	366	104	149	197	247	299	353
2000	300	900	158	226	299	375	454	536	157	224	296	371	450	531	146	209	276	346	419	494	141	202	266	334	405	478	118	169	222	279	338	399	116	166	219	275	333	393
2000	300	1000	172	246	324	407	493	582	170	243	321	403	488	576	158	227	299	375	454	536	156	223	294	369	446	527	131	187	247	310	376	444	127	181	239	300	364	430
2000	400	400	99	141	186	234	283	335	92	131	173	217	263	311	90	129	171	214	259	306	80	114	151	189	229	270	79	112	148	186	226	266	66	95	125	157	190	225
2000	400	500	120	172	227	284	345	407	109	155	205	257	311	368	105	150	198	248	301	355	99	142	187	234	284	335	94	134	177	221	268	317	84	121	159	201	242	286
2000	400	600	140	200	265	332	402	475	131	187	247	310	375	443	122	175	231	290	351	415	112	160	212	266	322	380	107	154	203	254	308	364	98	140	185	233	282	333
2000	400	700	155	222	293	367	445	525	150	215	284	356	431	509	140	200	264	331	401	474	131	187	246	309	374	442	117	167	221	277	336	396	115	164	217	272	329	389
2000	400	800	165	236	312	391	474	559	163	233	307	385	467	551	154	220	291	365	442	522	149	214	282	354	429	506	131	188	248	311	377	445	122	175	231	290	351	414
2000	400	900	181	259	342	429	519	613	176	251	331	416	504	595	164	234	309	388	470	555	162	233	308	386	469	553	146	209	276	346	419	495	139	199	263	330	399	471
2000	400	1000	196	280	370	464	562	663	191	273	360	452	548	647	175	251	331	415	503	594	174	249	328	412	499	589	160	228	302	378	458	541	154	221	291	366	443	523
2000	500	400	120	172	227	284	345	407	107	152	201	252	306	361	107	153	202	253	307	362	99	142	187	234	284	335	102	145	192	241	292	344	88	125	165	207	251	296
2000	500	500	142	203	267	335	406	480	129	185	244	307	371	438	127	182	240	302	365	431	113	162	214	269	325	384	112	160	211	264	320	378	104	149	196	246	299	353
2000	500	600	157	225	297	372	451	532	151	216	285	358	433	512	147	211	278	349	422	499	134	191	252	316	383	452	128	183	241	303	367	433	118	169	223	280	339	400
2000	500	700	170	243	321	403	488	576	165	236	312	391	474	560	163	232	307	385	466	550	155	221	292	366	443	524	143	204	270	338	410	484	133	190	251	315	382	450
2000	500	800	185	264	349	438	531	626	179	256	337	423	513	605	170	244	321	403	488	577	166	238	315	396	485	563	159	227	300	376	470	538	149	212	280	352	426	503
2000	500	900	202	289	381	478	579	684	194	278	367	460	558	658	182	261	344	432	523	617	178	255	336	422	511	604	173	247	326	409	495	584	166	237	313	392	475	561
2000	500	1000	220	315	416	522	632	746	213	304	402	504	611	721	196	280	370	464	562	664	191	274	361	453	549	648	177	254	335	420	509	601	171	245	323	406	492	580
2000	600	400	141	202	267	335	406	479	126	180	237	298	361	426	130	186	245	308	373	440	113	162	214	268	325	384	119	171	225	283	343	404	108	154	203	255	308	364
2000	600	500	157	225	297	372	451	532	148	212	279	350	424	501	149	213	282	353	428	506	134	191	252	316	383	452	134	192	254	318	386	455	120	171	226	284	344	406
2000	600	600	172	245	324	406	492	581	166	238	314	394	477	563	163	234	308	387	469	553	156	223	295	370	448	529	152	218	287	360	437	515	138	197	260	326	394	466
2000	600	700	186	267	352	442	535	632	178	255	336	422	511	603	175	250	329	413	501	591	170	240	320	400	485	572	164	234	309	388	470	555	154	221	291	365	442	522
2000	600	800	205	294	388	487	589	696	195	279	369	462	560	661	187	268	353	443	537	634	181	259	341	428	519	613	175	251	331	415	503	593	173	247	326	409	495	585
2000	600	900	224	320	422	530	642	758	214	306	404	507	614	725	202	289	382	479	580	685	195	279	368	461	559	660	185	264	349	437	530	626	177	254	335	426	518	608
2000	600	1000	237	339	448	562	681	804	233	334	441	553	670	791	219	313	413	519	628	742	210	300	396	497	602	711	196	281	371	465	563	665	195	279	368	462	559	660
2000	700	400	155	222	293	367	445	525	142	203	269	337	408	482	148	212	279	350	424	501	131	187	246	309	374	442	139	198	262	328	397	469	119	171	225	283	342	404
2000	700	500	170	243	321	403	488	576	159	228	301	377	457	540	163	233	308	386	468	553	155	221	292	366	443	524	156	223	294	369	446	527	140	200	264	331	402	474
2000	700	600	186	267	352	442	535	632	176	252	332	417	505	596	177	253	333	418	507	598	166	237	315	390	470	565	170	244	322	404	489	577	158	226	299	375	454	536
2000	700	700	207	295	390	489	592	700	194	277	366	459	556	657	190	272	360	451	546	645	184	263	346	434	525	619	183	261	344	431	522	616	176	251	331	416	503	594
2000	700	800	226	323	426	535	648	765	214	306	404	507	614	724	207	296	391	491	595	702	197	282	372	467	566	668	191	274	361	453	549	648	190	272	359	451	546	645
2000	700	900	240	343	453	568	688	813	234	335	442	555	672	794	225	322	425	533	646	763	213	304	402	504	611	721	204	291	385	483	585	690	201	287	379	475	575	679
2000	700	1000	254	364	480	602	729	861	248	355	468	587	711	840	240	343	453	568	688	813	232	331	438	549	665	785	217	310	409	513	622	734	213	304	402	504	611	721
2000	800	400	165	236	312	391	474	559	155	222	293	368	446	526	161	231	304	382	463	546	149	214	282	354	429	506	155	222	293	368	446	526	139	198	262	328	397	469
2000	800	500	185	264	349	438	531	626	173	247	326	409	495	585	176	252	333	417	506	597	165	235	314	390	470	560	170	243	321	403	488	576	161	230	303	380	461	544
2000	800	600	205	294	388	487	589	696	191	273	360	451	547	645	192	274	362	454	550	650	181	259	341	428	519	613	182	260	343	431	521	616	177	253	333	418	507	598
2000	800	700	226	323	426	535	648	765	210	300	396	497	602	711	210	300	396	497	603	711	197	282	372	467	566	668	198	282	373	467	566	668	191	273	360	452	547	646
2000	800	800	241	345	455	571	691	816	234	334	441	554	671	792	230	329	434	544	659	779	214	307	405	508	615	726	210	300	396	497	602	711	204	292	385	483	585	691

			Maximum Power Distribution (W)						Maximum Power Distribution (W)						Maximum Power Distribution (W)						Maximum Power Distribution (W)						Maximum Power Distribution (W)						Maximum Power Distribution (W)					
H (mm)	W (mm)	D (mm)	15 K	20 K	25 K	30 K	35 K	40 K	15 K	20 K	25 K	30 K	35 K	40 K	15 K	20 K	25 K	30 K	35 K	40 K	15 K	20 K	25 K	30 K	35 K	40 K	15 K	20 K	25 K	30 K	35 K	40 K	15 K	20 K	25 K	30 K	35 K	40 K
2000	800	900	256	366	483	606	734	866	248	354	467	586	710	839	243	348	460	577	698	825	234	335	442	554	671	792	224	321	423	531	643	760	217	310	409	514	622	735
2000	800	1000	272	389	514	644	781	922	265	379	500	627	760	897	257	367	484	607	736	869	251	359	474	595	721	851	243	347	458	574	696	821	231	331	437	548	664	784
2000	1000	400	196	280	370	464	562	663	178	254	335	421	510	602	188	269	355	446	540	638	174	249	328	412	499	589	182	260	343	431	522	616	172	247	325	408	494	584
2000	1000	500	220	315	416	522	632	746	200	285	377	472	572	676	209	299	395	495	600	708	191	274	361	453	549	648	200	285	377	472	572	676	187	268	354	444	538	635
2000	1000	600	237	339	448	562	681	804	223	319	421	528	640	755	229	328	433	543	658	776	210	300	396	497	602	711	217	310	410	514	622	735	204	292	385	483	585	691
2000	1000	700	254	364	480	602	729	861	243	347	458	575	696	822	245	351	463	581	704	831	232	331	438	549	665	785	235	337	444	557	675	797	221	316	417	523	633	747
2000	1000	800	272	389	514	644	781	922	259	371	490	614	744	879	260	372	492	617	747	882	251	359	474	595	721	851	252	360	476	598	725	854	237	339	448	562	681	804
2000	1000	900	291	416	549	688	834	985	276	395	522	655	793	936	277	397	524	657	796	939	264	378	499	626	758	895	265	379	500	627	759	896	255	364	481	603	730	862
2000	1000	1000	312	446	589	739	895	1057	295	422	557	699	847	1000	292	418	552	692	839	990	278	398	525	659	798	942	273	390	515	646	782	924	269	385	508	637	771	911
2000	1200	400	225	321	424	532	644	761	203	290	383	480	581	687	220	315	416	521	632	746	196	281	371	465	563	665	214	306	404	507	614	724	194	278	367	460	557	658
2000	1200	500	245	351	463	581	704	831	231	330	436	547	663	782	239	341	450	565	684	808	220	314	414	520	630	744	234	335	442	555	672	793	215	308	406	510	618	729
2000	1200	600	265	379	500	627	760	897	248	355	469	588	713	842	258	368	486	610	739	872	245	350	462	580	702	829	248	355	469	588	713	842	235	336	444	557	675	796
2000	1200	700	285	407	538	674	817	965	269	384	507	637	771	910	274	392	518	649	787	929	260	372	491	616	746	881	265	379	500	627	759	897	256	366	483	605	733	866
2000	1200	800	308	441	582	730	884	1044	288	411	543	681	825	974	294	420	554	695	842	994	275	394	520	652	790	933	279	398	526	660	799	944	270	387	510	640	775	915
2000	1200	900	331	474	625	784	950	1122	307	439	580	727	881	1040	312	446	589	739	895	1057	291	417	550	690	835	986	292	418	552	692	839	990	283	405	534	670	812	959
2000	1200	1000	355	508	670	841	1019	1203	328	469	619	776	940	1110	330	472	623	782	947	1118	307	439	580	727	881	1040	309	439	581	729	883	1044	296	423	558	700	848	1001
2200	300	400	86	122	162	203	246	290	77	110	146	183	221	261	73	104	137	172	209	247	64	92	121	152	185	218	59	84	111	140	169	200	53	75	99	125	151	178
2200	300	500	104	149	196	246	298	352	96	138	182	228	276	326	92	132	174	218	264	312	84	120	158	198	240	284	76	108	143	179	217	257	66	94	125	156	189	223
2200	300	600	125	179	237	297	360	425	118	168	222	279	338	399	106	152	201	252	305	360	101	144	190	239	289	342	91	130	171	214	260	307	83	119	157	197	239	282
2200	300	700	144	206	272	341	413	487	139	198	262	328	398	470	123	176	233	292	354	417	117	168	221	278	336	397	103	147	194	244	295	349	98	140	185	232	281	332
2200	300	800	153	218	288	362	438	517	152	217	287	360	436	515	140	201	265	332	402	475	135	193	254	319	387	456	115	164	217	272	330	389	111	159	210	263	319	377
2200	300	900	165	236	312	391	473	559	164	234	309	388	470	554	152	218	288	361	437	516	150	214	283	355	430	507	128	183	241	303	367	433	123	176	233	292	354	418
2200	300	1000	180	257	339	425	515	609	178	255	336	422	511	603	160	228	302	378	458	541	160	225	298	373	451	533	142	202	267	335	406	479	137	196	258	324	392	463
2200	400	400	106	152	201	252	305	360	97	138	183	229	278	328	95	136	180	226	274	323	86	123	162	203	246	290	84	121	159	200	242	286	73	104	138	173	209	247
2200	400	500	130	186	245	308	373	440	119	170	224	281	340	402	114	163	215	269	326	385	104	149	197	247	299	353	101	144	191	239	290	342	90	129	171	214	260	306
2200	400	600	148	212	279	351	425	501	142	203	267	336	406	480	132	189	250	313	379	448	122	175	231	289	350	414	112	161	212	266	322	380	108	154	204	255	309	365
2200	400	700	157	224	296	371	450	531	156	223	295	370	448	529	147	210	278	348	422	498	141	202	267	335	405	479	127	182	241	302	366	432	117	168	221	277	336	397
2200	400	800	173	247	326	409	496	585	168	240	317	397	481	568	157	225	297	372	451	533	156	222	294	368	446	527	142	204	269	337	409	483	134	192	253	317	384	454
2200	400	900	189	270	356	447	541	639	183	262	345	433	525	619	170	243	320	402	487	575	167	238	315	395	478	565	154	220	290	364	441	521	149	212	280	352	426	503
2200	400	1000	208	297	392	492	596	704	201	287	379	475	575	679	182	260	343	430	521	615	179	256	338	424	514	607	165	236	312	391	473	559	164	235	310	389	471	556
2200	500	400	130	186	245	308	373	440	115	165	218	273	331	391	117	167	221	277	335	396	104	149	197	247	299	353	104	149	196	246	299	352	95	135	178	224	271	320
2200	500	500	149	213	281	352	426	504	141	201	265	333	403	476	138	198	261	328	397	469	124	177	234	293	355	420	122	174	230	289	350	413	112	160	211	264	320	378
2200	500	600	159	228	301	377	457	539	158	226	298	373	452	534	155	221	292	367	444	524	144	206	272	341	413	487	138	197	260	326	395	467	126	180	237	298	361	426
2200	500	700	176	252	333	417	505	597	169	242	319	400	485	573	167	239	317	397	480	567	159	228	301	377	457	540	152	218	287	361	437	516	142	202	267	335	406	479
2200	500	800	195	280	369	463	561	662	185	265	350	439	531	627	176	251	332	416	504	595	171	245	324	406	492	580	165	236	311	391	473	559	160	229	302	379	459	541
2200	500	900	213	304	401	504	610	720	205	293	387	486	588	695	191	273	360	451	547	646	185	264	348	437	530	625	178	255	334	421	515	605	172	246	324	407	493	582
2200	500	1000	226	323	426	535	648	765	223	319	420	527	639	754	207	296	390	490	593	701	199	285	376	472	572	675	183	261	345	433	524	619	176	252	335	418	501	595
2200	600	400	148	212	279	351	425	501	134	192	254	318	385	455	139	199	263	330	400	472	122	175	231	289	350	414	127	182	240	301	365	431	112	160	211	265	321	379
2200	600	500	159	228	301	377	457	539	154	221	291	366	443	523	155	222	293	367	445	526	144	206	272	341	413	487	146	209	276	346	419	494	129	185	244	307	371	438
2200	600	600	177	253	334	419	508	600	168	240	317	397	481	568	166	238	314	394	477	563	162	232	306	385	467	551	161	230	304	382	463	547	147	210	277	347	421	497
2200	600	700	198	283	374	469	568	671	185	265	350	439	532	628	180	257	340	426	516	610	174	248	328	411	498	588	167	239	316	396	480	567	165	236	311	390	473	558
2200	600	800	215	307	406	509	617	728	205	293	387	485	587	694	197	282	372	467	566	668	188	269	356	446	540	638	179	255	337	423	512	605	175	250	330	414	501	592
2200	600	900	230	329	434	545	660	779	225	322	425	533	646	762	214	306	404	507	614	725	203	291	384	481	583	688	192	274	362	454	550	649	187	268	354	444	538	635
2200	600	1000	245	351	463	581	703	830	239	343	452	567	687	811	228	326	430	539	653	771	221	316	417	523	633	747	204	292	386	484	586	692	199	285	376	472	572	675
2200	700	400	157	224	296	371	450	531	150	214	282	354	429	506	154	220	290	364	441	520	141	202	267	335	405	479	148	211	279	350	424	500	130	186	246	308	374	441
2200	700	500	176	252	333	417	505	597	165	236	311	390	473	558	167	239	316	396	479	566	159	228	301	377	457	540	162	231	305	383	463	547	150	214	282	354	429	506
2200	700	600	198	283	374	469	568	671	182	261	344	432	523	618	184	264	348	437	529	624	174	247	326	410	497	587	175	249	327	411	498	589	167	239	315	395	479	565
2200	700	700	216	309	408	512	620	732	203	290	383	481	583	688	201	287	379	476	576	681	189	270	357	448	542	640	184	264	348	437	529	624	181	259	341	428	519	612
2200	700	800	232	332	439	550	667	787	226	323	426	534	647	764	220	315	415	521	631	745	206	294	388	487	590	696	199	285	376	472	571	674	192	275	363	455	551	651
2200	700	900	248	355	468	587	711	840	240	344	454	569	689	814	232	332	438	550	666	786	224	321	423	531	643	759	213	305	403	506	612	723	205	293	387	485	588	694
2200	700	1000	265	379	501	628	761	898	256	367	484	607	736	868	246	351	464	582	704	832	241	344	454	570	690	815	230	329	434	544	659	778	221	316	417	523	634	748
2200	800	400	173	247	326	409	496	585	160	229	302	379	459	541	165	236	312	391	474	559	156	222	294	368	446	527	160	229	302	379	459	541	150	214	283	355	430	508
2200	800	500	195	280	369	463	561	662	178	255	336	422	511	603	183	261	345	433	524	619	171	245	324	406	492	580	173	248	327	411	497	587	167	239	315	396	479	566
2200	800	600	215	307	406	509	617	728	199	285	376	471	571	674	203	290	383	481	582	688	188	269	356	446	540	638	188	270	356	446	541	638	180	258	341	427	518	611
2200	800	700	232	332	439	550	667	787	221	315	416	522	633	747	222	318	420	526	638	753	206	294	388	487	590	696	206	295	389	487	590	697	194	278	367	460	557	658
2200	800	800	249	356	470	590	715	844	239	342	452	567	687	811	235	336	444	557	674	796	225	322	426	534	647	764	221	317	418	524	635	750	209	299	395	495	600	708
2200	800	900	267	382	504	632	766	904	256	366	483	606	734	867	249	356	470	590	714	844	242	346	457	574	695	820	236	337	445	558	676	799	226	324	428	536	650	767
2200	800	1000	285	408	539	676	818	966	273	390	515	647	783	925	265	379	501	628	761	898	258	368	486	610	739	872	247	353	466	584	708	835	243	348	459	576	697	824
2200	1000	400	208	297	392	492	596	704	184	263	347	436	528	623	198	283	373	469	568	670	179	256	338	424	514	607	189	271	357	448	543	641	176	251	331	416	504	595
2200	1000	500	226	323	426	535	648	765	210	300	396	497	602	711	220	314	415	520	630	744	199	285	376	472	572	675	210	300	396	497	602	711	193	276	364	457	553	653
2200	1000	600	245	351	463	581	703	830	232	332	438	549	665	785	235	336	444	557	675	797	221	316	417	523	633	747	228	327	431	541	655	773	211	301	397	499	604	713
2200	1000	700	265	379	501	628	761	898	250	358	472	592	718	847	252	360	475	596	722	853	241	344	454	570	690	815	242	346	457	573	694	820	231	330	436	546	662	782
2200	1000	800	285	408	539	676	818	966	268	384	506	635	769	908	270	386	510	639	774	914	258	368	486	610	739	872	258	369	488	610	740	874	251	359	474	594	720	850
2200	1000	900	307	439	579	727	881	1040	289	413	546	685	829	979	290	414	547	686	830	981	273	391	516	648	785	926	275	393	517	648	786	928	264	378	499	626	758	895
2200	1000	1000	333	476	628	788	954	1126	312	446	589	739	895	1057	307	439	580	727	881	1040	290	415	548	688	833	983	285	407	538	674	817	964	278	397	524	657	796	940
2200	1200	400	231	331	437	548	663	783	215	307	405	508	616	727	228	326	430	539	653	771	207	297	392	491	595	703	222	318	420	527	638	753	201	288	380	477	577	682
2200	1200	500	255	365	481	604	732	864	237	338	447	560	679	801	246	352	465	584	707	835	232	331	437	548	664	784	241	344	454	570	690	815	224	320	423	531	643	759
2200	1200	600	278	397	525	658	797	941	257	368	485	609	738	871	266	380	501	629	762	900	249	356	470	590	715	844	257	368	485	609	738	871	242	346	456	572	693	819
2200	1200	700	302	432	570	715	866	1023	278	398	525	659	799	943	288	412	544	682	826	975	269	385	508	637	772	911	273	391	516	647	784	926	264	378	499	626	758	895
2200	1200	800	327	467	616	773	937	1106	302	432	570	715	866	1022	308	440	581	729	883	1042	286	410	541	678	822	970	291	416	549	689	835	985	278	398	526	659	799	943
2200	1200	900	357	511	674	846	1024	1209	326	466	615	772	935	1104	332	474	626	785	951	1123	305	437	577	723	876	1035	308	440	581	729	883	1042	294	420	554	695	842	994
2200	1200	1000	387	554	731	917	1111	1312	350	501	661	829	1004	1186	354	506	668	838	1016	1199	324	463	611	766	928	1096	323	463	611	766	928	1096	308	440	581	728	882	1042

IP 55 E-Kabin E Series cooling power values

				Maximum Power Distribution (W)						Maximum Power Distribution (W)						Maximum Power Distribution (W)						Maximum Power Distribution (W)					
	H (mm)	W (mm)	D (mm)	15 K	20 K	25 K	30 K	35 K	40 K	15 K	20 K	25 K	30 K	35 K	40 K	15 K	20 K	25 K	30 K	35 K	40 K	15 K	20 K	25 K	30 K	35 K	40 K
Single Door	500	600	250	33	48	63	79	96	113	32	46	61	77	93	110	30	43	57	71	86	102	27	39	51	65	78	93
	650	600	250	37	54	71	89	108	128	36	52	68	86	104	123	34	49	64	81	98	116	31	45	59	74	90	106
	800	600	250	41	59	78	99	119	141	40	57	76	95	115	136	37	52	69	87	106	125	34	50	66	82	100	118
	950	600	250	47	68	89	112	136	160	45	64	85	107	130	153	40	57	75	95	115	135	38	55	72	91	110	130
	1100	600	250	50	71	94	118	143	169	48	69	91	114	139	164	45	65	86	108	131	155	42	61	80	101	122	145
	1250	600	250	51	72	95	120	145	171	60	86	114	143	173	204	57	81	107	134	162	192	53	76	101	127	153	181
	800	800	250	54	77	102	129	156	184	53	77	101	127	154	182	51	73	96	121	147	173	46	66	87	110	133	157
	950	800	250	64	91	121	152	184	217	60	86	113	142	172	204	53	76	101	127	153	181	52	75	99	124	150	177
	1100	800	250	69	99	131	165	200	236	68	97	128	161	195	230	62	89	118	148	179	211	56	81	107	134	163	192
	1250	800	250	72	103	135	170	206	243	69	99	131	164	198	234	64	92	122	153	185	218	75	107	141	177	214	252
	1500	600	220	62	89	117	147	178	210	60	86	114	143	173	204	52	74	98	123	149	176	63	91	120	150	182	214
	1500	800	220	89	127	167	210	254	300	83	119	156	196	238	281	75	107	141	177	214	253	88	125	165	207	251	297
	1800	600	220	79	112	148	186	225	266	72	103	136	171	207	245	63	90	119	149	181	213	80	115	152	190	231	272
	1800	800	220	101	145	191	240	291	343	97	139	183	230	279	329	90	128	169	212	257	304	113	161	213	267	323	382
	2000	600	220	89	127	168	211	255	301	85	121	160	200	243	286	72	103	135	170	206	243	91	130	172	216	261	309
	2000	800	220	112	161	212	266	322	381	108	155	204	256	310	367	98	140	184	231	280	331	125	178	235	295	357	422

IP 66 E-Kabin O Series cooling power values

			Maximum Power Distribution (W)						Maximum Power Distribution (W)						Maximum Power Distribution (W)						Maximum Power Distribution (W)					
H (mm)	W (mm)	D (mm)	15 K	20 K	25 K	30 K	35 K	40 K	15 K	20 K	25 K	30 K	35 K	40 K	15 K	20 K	25 K	30 K	35 K	40 K	15 K	20 K	25 K	30 K	35 K	40 K
300	200	150	10	14	18	22	27	32	9	13	17	21	25	30	8	11	15	19	23	27	7	10	13	17	20	24
300	300	200	15	21	28	35	42	50	14	20	26	32	39	46	13	18	24	30	36	43	11	16	21	26	31	37
400	300	150	14	20	26	33	40	47	13	18	24	30	37	44	12	17	22	28	34	41	10	15	20	25	31	37
400	300	200	16	23	30	38	46	54	14	21	28	35	42	50	14	19	25	32	39	46	12	17	22	28	34	41
400	400	200	19	28	37	47	57	67	18	26	35	44	53	63	17	24	32	41	50	59	15	21	28	36	43	51
500	350	150	18	25	34	42	51	61	17	24	32	40	48	58	16	22	30	37	45	53	14	20	27	34	41	49
500	350	200	22	32	42	52	63	75	21	29	39	49	59	69	19	27	36	45	54	64	17	24	32	40	49	58
500	400	200	22	32	42	53	64	76	21	30	40	50	60	72	20	28	37	46	56	66	17	25	33	41	50	59
500	500	200	26	38	50	63	77	91	25	36	48	60	73	86	24	34	45	56	68	81	21	30	40	50	61	72
600	400	150	22	32	42	53	64	76	21	30	40	50	61	73	20	28	37	47	57	67	18	26	35	43	53	62
600	400	200	25	36	48	60	73	86	23	34	44	56	68	80	22	31	41	52	63	74	20	28	37	47	57	68
600	400	300	31	44	58	73	89	105	28	41	54	67	82	97	26	37	49	61	75	88	23	33	43	55	66	78
600	500	300	36	51	68	85	104	122	33	48	63	79	96	114	31	44	59	74	89	105	27	39	52	65	79	93
600	600	200	34	49	65	82	99	117	33	47	62	78	94	112	31	44	59	74	89	106	28	40	53	67	81	95
600	600	250	38	54	72	90	109	129	36	51	68	85	103	122	33	48	64	80	97	114	30	43	56	71	86	102
700	500	200	33	47	62	78	95	112	31	44	59	74	89	105	29	41	55	69	84	99	26	38	50	63	77	91
700	500	300	39	56	75	94	114	134	37	52	69	87	106	125	34	48	64	80	97	115	30	43	57	72	87	103
800	600	200	41	59	78	98	119	141	39	56	74	93	113	133	37	53	70	88	107	126	34	49	65	81	99	116
800	600	250	45	65	85	107	130	154	42	61	80	101	122	145	40	57	75	95	115	136	36	52	69	86	105	123
800	600	300	51	73	96	121	146	173	47	68	90	112	136	161	42	61	81	101	123	145	38	55	73	91	110	131

IP 66 E-Kabin M Series cooling power values

			Maximum Power Distribution (W)						Maximum Power Distribution (W)						Maximum Power Distribution (W)						Maximum Power Distribution (W)					
H (mm)	W (mm)	D (mm)	15 K	20 K	25 K	30 K	35 K	40 K	15 K	20 K	25 K	30 K	35 K	40 K	15 K	20 K	25 K	30 K	35 K	40 K	15 K	20 K	25 K	30 K	35 K	40 K
800	800	300																								
900	600	300	55	79	105	132	160	189	52	75	99	125	151	178	46	66	87	109	132	156	42	60	79	99	120	142
1000	600	300																								
1000	700	300	70	100	132	165	200	237	62	89	117	147	178	210	57	82	108	136	165	194	55	79	104	130	158	187
1000	800	300																								
1000	800	400																								
1200	600	300																								
1200	800	300	92	132	174	218	265	313	85	122	161	202	245	289	77	110	145	182	221	261	72	103	137	172	208	246
1200	800	400	112	160	211	265	321	379	103	148	195	245	297	350	90	128	170	213	258	305	80	115	151	190	230	272

Stainless Steel Electrical Enclosures

It is generally preferred that the electrical enclosures are manufactured from stainless steel material in various industrial applications where corrosion resistance is important. However, there are rules to be considered when selecting and using stainless steel materials.

Stainless Steel Enclosures
Stainless steel is a proven it's reliability in various industrial applications as electrical equipment enclosures. In the corrosion resistance of the stainless steel, the environment and its conditions of the application, the grade of steel and the surface treatment have determinant importance.

When the characteristics of stainless steel enclosures are determined for using in a project, by careful consideration of the factors stated here, the required level of corrosion protection and the overall success of the application can be possible.

Stainless steel self-repair feature

The metallic satin finish of the stainless steel makes itself passive, if a suitable environment is provided, i.e. sufficient oxygen and available rich chromium oxidation.

This reaction occurs spontaneously in very short time once the sufficient oxygen contacts on the surface, and the protective layer thus formed becomes thick over time.

The resistance against corrosion on the surface has the ability to repair itself in case of mechanical defection.

Environment and its conditions;
The climate of the area where the application will be, has a great effect on the corrosion resistance of the stainless steel material.

For example, 304 grade stainless steel is resistant to corrosion under a wide range of environment conditions and climate effects, but it is inevitable to experience corrosion in salt and other chloride environments. De facto, 304 grade stainless steel should not be used up to 10 km inside by the sea coast; but the actual length of this distance can be determined by evaluating the climatic conditions according to the application area specifications. By this reason, it is not recommended to use 304 grade stainless steel in marine applications without

taking special precautions. In cold climate zones, chlorides are used as defrosting chemicals and also, can cause point corrosion on 304 stainless steel surfaces.

In industrial environments, chlorides can be existing in smoke and flying ashes. These are dirt and debris deposits on non-washed, uncleaned surfaces and eventually they may cause point corrosion. Even if the right stainless steel is chosen, corrosive substances condensed in the accumulation of impurities in that way, may cause the protective passive layer on the stainless steel surface to be pierced. In such cases, cleaning is necessary. By this way, self-repairing of stainless steel material can be provided and the stainless steel surfaces can be prevented from condensation of sulfur-dioxide, chloride or ferrous deposits.

In another particular attention should be paid not only to the general climatic conditions, but also to the specific micro-climatic conditions where the enclosure is to be mounted. The most obvious example to this, is the negative effect in the settlement areas especially in highways, where salt and chemicals are is used as de-icing, which can be carried up to a distance by the vehicles. Likewise, the effects of increased exhaust gas emission by the dense and stopped traffic on the underpass, in the tunnel or at the ticket office, can be evaluated in terms of attracting attention to the micro-climatic conditions.

Which grade of stainless steel?
304 grade stainless steel is the most widely used type in different applications where a special corrosion resistance is not required. More harsh environments require the use of 316 qualities which is more expensive grade of stainless steel. However, even for 316 grade stainless steel, chemicals, their concentration and their level of aggressiveness in the environment must be examined, evaluated and observed in deep detail; because there may be cases where this grade is not sufficient.

304 Grade Stainless Steel
SEA 304-304L / EN 1.4301-1.4303
Classified as 304 grade by the American Society of Automotive Engineers - SAE, stainless steel contains 18-20% chromium and 8-10.5% nickel. The 304 grade sometimes referred to as '18 -8 ', is widely used as standard stainless steel grade in different industrial applications. The most common application where the use of 304 quality stainless steel is inconvenient, is the outdoor applications in the coastal areas where the salt is deposited on the surfaces by flying.

In the food and beverage industry, it is necessary for the enclosures to be washed frequently without worrying about rusting. 304 grade stainless steel is used extensively here. Due to its high resistance to various acids found in meat, milk, fruits and vegetables, 304 grade stainless steel has become the ideal raw material for control and control equipment enclosures of machines used in food and beverage processes. Nevertheless, a stronger stainless steel grade may be required, if the environment has excessive chloride usage, or cleaning procedures require high corrosion resistance solvents.

The use of 304 grade stainless steel may be sufficient in a majority of waste treatment and clean water treatment plants. However, in some clean water treatment plants, chlorine gas is used as a disinfectant and sulfur dioxide is used to remove the residues of used chlorine. When the nature of the environment with high humidity and the corrosive effect of these gases are combined together, the capabilities of 304 grade stainless steel are exceeded. Some municipalities put efforts to use less chemicals with environment friendly approaches and apply ultraviolet treatment for water treatment. 304 quality stainless steel can be used, due to no chemical usage in such facilities.

316 Grade Stainless Steel
SEA 316-316L / EN 1.4401-1.4404
The second most widely used grade of stainless steel is 316 when the limits of 304 are reached. In general, 316 quality stainless steel, which is 25-35% more expensive, has a higher nickel content and an additive molybdenum content of 2-3%. Molybdenum additive provides increase of corrosion resistance especially against chlorides.

The rate of chloride contained in water is the most determinant factor in the selection of stainless steel enclosure material for water treatment plants. 304 grade stainless steel is able to withstand against the corrosive effect of water containing up to 100 ppm of chloride. On the contrary, in the 316 grade stainless steel material, this limit is up to 1000 ppm of chloride. In addition to chlorides, there are other substances that affect the corrosive behavior of the water. Especially, attention should be paid to halides such as bromides or

iodides which are not chlorides. Another important factor is the presence of water oxidizers (e.g. ozone); the risk of point corrosion is also increasing as long as water oxidizing power increases. In such some cases, 316 grade stainless steel is also insufficient.

316 grade stainless steel commonly known as the marine standard, cannot withstand to be presented in continuous saline water (equivalent to 19,000 ppm chlorine). However, it can be used in overwater applications such as temporary and short-term salt spray applications. It should not be forgotten to take various precautions for the application areas with narrow and closed low airflow a difficult harsh environment conditions with low pH or high temperature. 316 grade stainless steel is generally considered as an adequate enclosure for marine applications such as ships and oil platforms and even for salt mines. Essentially, the stainless steel grade is 316 which should be used mainly in corrosive environments where high chloride levels are present.

316 grade stainless steel should be preferred because of having high chloride resistance in food processing plants using excessive acidic chemicals and concentrated chloride salts. 316 grade stainless steel having considerable degree of resistance against sulfuric acid solutions (<10%) and sulfur-containing gases, is used as the raw materials for the enclosures used in industries where they are frequently found. For example, 316 grade stainless steel is used in the paper industry. Similarly, in other industries such as vulcanization process for the rubber or gun powder manufacturing, it is also widely used.

Nitric and hydrochloric acid
As a general rule, 316 grade stainless steel enclosures are more resistant to aggressive chemical environments than 304 grade. Nitric acid is at the top of special cases which does not suit this rule. Nitric acid is especially used in fertilizer production, pharmaceutical industry and explosive production; also, it can be used in synthetic yarn and polymer manufacturing or in water treatment plants.

All stainless steel grades have a slight resistance to nitric acid, but in industries where the use of nitric acid is widespread, 304 grade stainless steel should be preferred due to its high resistance against this substance. In this case, the self-passive ability of the stainless steel is enhanced by the strong oxidizing effect of nitric acid and the corrosion resistance of the stainless steel is increased.

It is important to consider that neither the 304 grade nor the 316 grade stainless steel will be able to withstand against the chemical corrosion caused by hydrochloric acid. This acid destroys the passive surface and leaves the metal vulnerable.

Swimming pool environments

The swimming pool atmosphere is generally characterized by at a relative humidity approximately 60-70% together with chlorine and chlorine compounds relatively high levels. The original "pool smell" is existent due to these. These substances can be spread to the entire space as both steam and aerosol. In addition to sodium chloride, relatively high amounts of calcium and magnesium chloride are found in many applications. Typical values are 2-5% for the chloride ratio and 3-4 for the pH value. The high relative humidity rate fluctuates by depending on the intensity of swimming activity, the temperature changes during the day and resulting in the accumulation of deposits at various locations with the switched off air conditioning system in the nights. The evaporation of chloride-containing liquids and the increase of chloride concentration in the contact zones considerably increase the likelihood of corrosion.

It is necessary to pay special attention to the selection of the right material in swimming pool applications. Especially, attention should be paid to the selection of materials for enclosures placed in closed areas such as machine rooms of pools. Special precautions such as micro climate air quality, should be taken in these applications. It is obvious that the selection of 316 grade stainless steel will not sufficient alone in the presence of oxidizing substances such as ozone or where disinfectant chemicals are stored. In this case application of lacquer coating or 316 quality stainless steel or both is required.

Surface treatment

Grinding is common surface treatment for stainless steel enclosures used in industrial applications. The protective film as the purpose of masking, adhered on the outer surfaces of the enclosures is kept to the very last of the manufacturing steps, after removing the film and the possible adhesive residues are cleaned with special chemicals, the enclosure is packed with an air-permeable material before last packaging.

In addition to the surface treatment quality, the direction of grinding of the stainless steel surface is also important in terms of corrosion resistance. The vertically oriented grinding allows cleaning to be done easily and in case of outdoor applications, rain water can flow down itself with help of gravity. Some stainless steel enclosures can be painted. Especially, it is known that outdoor stainless steel enclosures exposed to intense solar radiation can be 10 degrees cooler, if they are painted with a light color. It is also possible to consider the paint as an additional layer of protection for extremely corrosive environments. Stainless steel can be painted by using standard paint process.

304 and 316 grades raw material discrimination test:

304 316

A fine liquid from Monil 304-316 separator solution is dropped on the surface (under room temperature). 20-25 minutes to be waited. The colour of drop is watched. On the tested surface, in 5 minutes, yellow-green-brown color changes in sequence as the proof of 316 grade stainless steel. For 316L grade stainless steel, more than 5 minutes to be waited.

Hygienic applications
Stainless steel enclosures are also preferred for their superior hygienic features in addition to their corrosion resistance. It is more difficult to stick and reproduce for bacterias and microbes on stainless steel surfaces (assuming to have appropriate surface smoothness). The smooth and though surface of the stainless steel allows for easier and more effective cleaning.

Precautions for storage and construction site environment
In order to ensure that the surface qualities of stainless steel enclosures are also protected under storage and site conditions, some precautions might be needed to be taken in addition to the manufacturer's precautions such as product packaging.
Water which may accumulate during storage and transport, especially under heat shrinkage or under the plastic packaging of the stretch-film construction, may cause corrosion. This is the case when the packaged product is left in a humid environment for a long time.

Strong acids (chloride based) which can be used for cleaning after ground work, especially stone or ceramic laying in new buildings, should be prevented from getting in contact with stainless steel surfaces. Any cleaning or rinsing fluid must not be interacted with the surrounding metals.

During storage, transfer, positioning and assembling in construction site environment, contamination of stainless steel enclosures' surfaces with carbon steel or iron must be avoided. For example, metal machining, grinding or welding around stainless steel enclosures should be avoided or precautions should be taken. Carbon steel metal burrs or slag splashing on the stainless steel surfaces will cause corrosion of splinters.

Cleaning before delivery
The stainless steel electrical enclosures manufactured by EAE, are delivered in an air-permeable package material, after the protective film is stripped and the surface is cleaned with flying chemicals which have protective features for stainless steel. Before the final delivery against the contamination, it is necessary to clean the surface defections which may be occurred in the workshop environment or the construction site environment.

Mortars and cement particles can be cleaned with 10-15% phosphoric acid. The solution should be applied hot onto the surface, subsequently, neutralized by the ammonia solution, finally rinsed with water purified from the minerals. Cleaning products manufacturers offer some special products for this type of cleaning. The superficial light stains can be removed by gentle cleaning creams and polishing pastes which are available in the market. These cleaning products contain substances that can penetrate the surface together with calcium carbonate. Household cleaners are also based on lemon acid and suitable for cleaning. Grinding powders containing iron adhering to the surface in a short time ago, should be cleaned with saturated solutions of oxalic acids. Firstly, it must be applied to the surface without pressing hardly with a soft cotton cloth or cotton-based polishing pad and waited for a few minutes. Thus, as a rule, it is ensured that the particles are separated from the surface without scratches and damages on the surface. Moderate level rust stains are cleaned using cleaning products containing phosphoric acid. Careful cleaning is done without damaging the surface and changing color. Alternatively, small amounts of iron particles treated on the surface are successfully cleaned with slenderized nitric acid. It is only possible to clean the surface treated with rust thoroughly with acid processing and / or passivation to be done professionally. The acid cleaning process should be considered as a thin layer removal from the surface. For this, a mixture of nitric acid and hydrofluoric acid is generally used. Passivation process is a controlled and accelerated reconstitution of the impaired passive layer on the surface in the nitric acid environment. However, first of all, the oil and organic soils on the surface must be cleaned.

Maintenance
For all stainless steel applications, periodic surface maintenance should be planned and applied during operation. 3M stainless steel cleaner and polish can be used for maintenance purposes.

Example of appearance that may be encountered in case of non-maintenance.

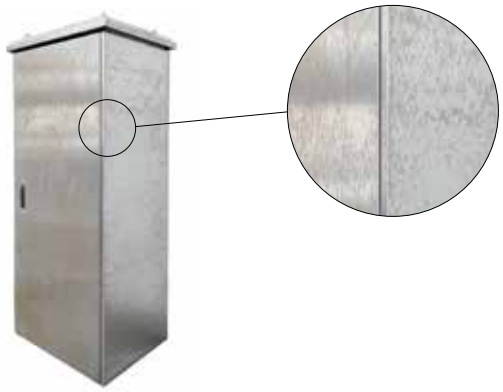

Earthing

Introduction

Main function of an electrical enclosure is to ensure the safety of operator and equipment. Appropriate precautions must be taken for the safety of personnel, property and electrical equipment located inside enclosures. Even careful design of switching systems and expert planning cannot prevent unwanted short-circuits when operating electrical systems. These must therefore be equipped with appropriate short circuit provisions. They must be able to conduct short-circuit currents without impairing safety.

Earthing connections are additional path for electrical current to return safely to the ground without danger to anyone in the event of a short circuit. If a short circuit did occur, the current would flow through the earthing connection. Causing a fuse blow or a circuit breaker trip is much preferable than the fatal shock that could result if the current was not grounded.

Regulations and Standards

The following standards should be considered regarding earthing:

- EN 62208:2011
  Empty enclosures for low-voltage switchgear and control gear assemblies – General requirement

- EN 61439-1:2011
  Low-voltage switchgear and control gear assemblies - Part 1: General rules

- EN 60204-1:2016
  Safety of machinery - Electrical equipment of machines - Part 1: General requirements

Test method to verify earth continuity

It shall be verified that the different exposed conductive parts of the enclosure are effectively connected to the earthing terminal or contact of the protective circuit and that the resistance of the circuit does not exceed 0,1 Ω.

Verification shall be made using a resistance measuring instrument or arrangement which is capable of driving a current of at least 10 A (a.c. or d.c.). The current is passed between each exposed conductive part and the earthing termination point. The voltage drop between these points is measured. The resistance calculated from the current and this voltage drop shall not exceed 0,1 Ω.

Requirements for earth continuity providing protection against the consequences of faults within the enclosure

EAE enclosures have been designed to ensure earth continuity protection against the consequences of faults within the enclosure, so all exposed conductive parts are interconnected together and have low resistance to the earthing terminal. Thus, earthing terminal can be bonded via an earthing conductor to the earthing arrangement of the system. These interconnections may be achieved either by metal screwed connections, welding or other conductive connections or by a separate protective conductor.

For the continuity of these connections during operation or maintenance the following shall apply:

a) When a part of the enclosure is removed, for example for routine maintenance, the protective circuits (earth continuity) for the remainder of the enclosure shall not be interrupted.

b) For lids, doors, cover plates and the like, the usual metal screwed connections and metal hinges are considered sufficient to ensure continuity provided that no electrical equipment exceeding the limits of extra low voltage (ELV) (50 V AC or 120 V DC see: IEC 61140-2016) is attached to them.

If apparatus with a voltage exceeding the limits of extra-low voltage are attached to lids, doors, or cover plates additional measures shall be taken to ensure earth continuity, therefore EAE accessories shall be mounted as protective conductors. These parts shall be fitted with a protective conductor (PE) whose cross-sectional area is in accordance with EN 61439-1:2011 Table 3 depending on the

highest rated operational current Ie of the apparatus attached, if the rated operational current of the attached apparatus is less than or equal to 16 A or an equivalent electrical connection especially designed and verified for this purpose (sliding contact, hinges protected against corrosion).
Exposed conductive parts of a device that cannot be connected to the protective circuit by the
fixing means of the device shall be connected separately to the protective terminal of the enclosure by a conductor whose cross-sectional area is chosen according to EN 61439-1:2011 Table 3.

Current carrying capacity of the integrated contacting

The integrated contacting system of EAE enclosures ensure a conducting connection between all elements. The results of our tests and measurements confirm that the connections possess a contact resistance of less than 0.1 Ω, as demanded in EN 62208:2011.

With regard to the inclusion of the door in the protection measures for “Protection in case of indirect contact” we recommend connection of a separate earth conductor to the door, when an apparatus is attached on the door and the rated operational current of the attached apparatus is higher than 16 A. The applicant must determine whether or not the integrated contacting is sufficient for the earthing system. Attention is here drawn to the regulations and standards. EAE enclosure doors are supplied with 6 mm2 cross-section earthing cable for attached apparatus rated current up to 63A.

EN 61439-1:2011 Tablo 3 - Cross-sectional area of a copper protective conductor (8.4.3.2.2)

Rated operational current, I_e A	Minimum cross-sectional area of a protective conductor mm2
$I_e \leq 20$	S
$20 < I_e \leq 25$	2,5
$25 < I_e \leq 32$	4
$32 < I_e \leq 63$	6
$63 < I_e$	10

Integrated contacting

The integrated contacting system of EAE enclosures ensure a contacting connection between all elements. All elements are made of galvanized sheet steel even if they are painted for esthetical reasons.

Conducting connection of painted elements is achieved,

Ⓐ by paint-masking of touching surfaces
Ⓑ by using earthing components
Ⓒ by self-tapping screws with earthing feature
Ⓓ by earthing washers and nuts

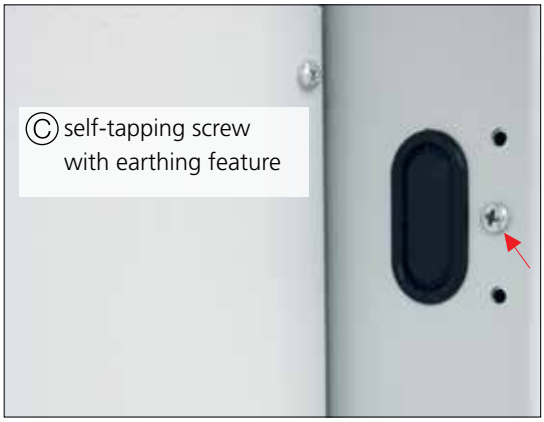

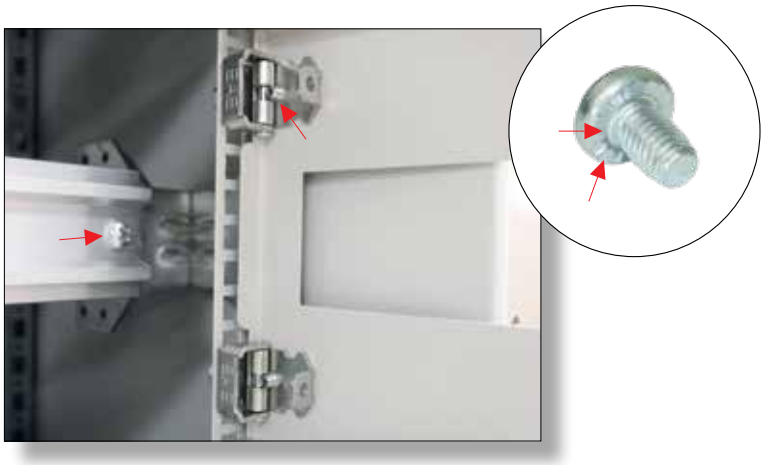

Ⓓ earthing washer and nut

EAE enclosure's doors are supplied with 6 mm² cross-section earthing cable for attached apparatus rated current up to 63A.

For additional earthing accessories please refer to product brochures and catalogues.

Seismic Precautions and Seismic Assembly Rules

PanelMaster products and their seismic applications have been tested in internationally recognized accredited laboratories according to IEC 60068-3-3 and IEC 60980 standards, and their seismic resistance has been verified .

PanelMaster Floor Standing Type and Wall Mounted Type Panels

IEC 60068-3-3 (Zone 4) Class: 0, IEC 60980 (Zone 4), for Nuclear Plants

TS EN IEC 60068-3-3 : 2019-12 - Table 3

Seismic activity zone	Zone 0	Zone 1	Zone 2	Zone 3	Zone 4
Ground acceleration, a_g (m/s²)	0	1	2	3	5

Below is a table of equivalence between seismic classifications depending on the peak ground acceleration value.

TS EN IEC 60068-3-3 : 2019-12, Table-4

Seismic Activity Zone	Peak Ground Acceleration (PGA) (PGA) (m/s²)	Modified Mercalli Index (MMI)	Richter scale
0	0.01	I	0 - 2
	0.01 - 0.02	II	1 - 2
	0.02 - 0.05	II	2 - 3
	0.05 - 0.1	IV	3 - 4
1	0.1 - 0.2	V	4 - 5
	0.2 - 0.5	VI	5 - 6
2	0.5 - 1	VII	5 - 7
3	1 - 2	VIII	6 - 8
4	2 - 5	IX	7 - 9
	5 - 10	X	8 or more than 8
	10 - 20	XI	
	more than 20	XII	

TS EN IEC 60068-3-3 : 2019-12
Qualification criteria

Criterion 0 : Equipment subjected to seismic testing which experienced no malfunction either during or after the test.

Criterion 1 : Equipment subjected to seismic testing which suffered a malfunction during the test but reverted to its correct state after the test.

Criterion 2 : Equipment subjected to seismic testing which experienced a malfunction during the test and required resetting or adjustment on completion of the test but required no replacement or repair.
It is very important that, Low voltage panels should be be tested and certified according to IEC 60068 standards for facilities located in earthquake risk areas in order to get uninterrupted energy.

Seismic Installation Rules For Stand Alone Panels

Rigid Installation From Top

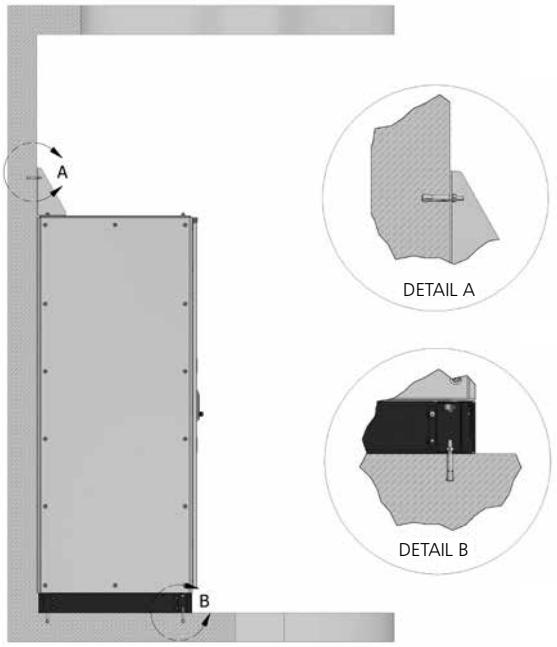

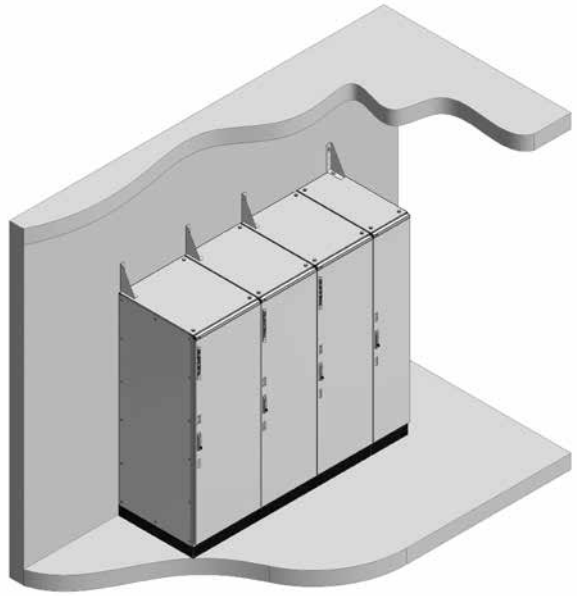

1. Each panel section will be fixed to the mounting floor with M12 anchor bolts with minimum 8.8 mechanical strength through 4 mounting holes in its base.
2. Each panel section will be fixed to the reinforced concrete building element by using M12 anchor bolts with strong brackets made of steel material of minimum 3 mm thickness from at least one of the upper lifting connection bolts.
3. It is assumed that structural elements which the connections are made have their own seismic strength.

Steel Wire Connection From Top:

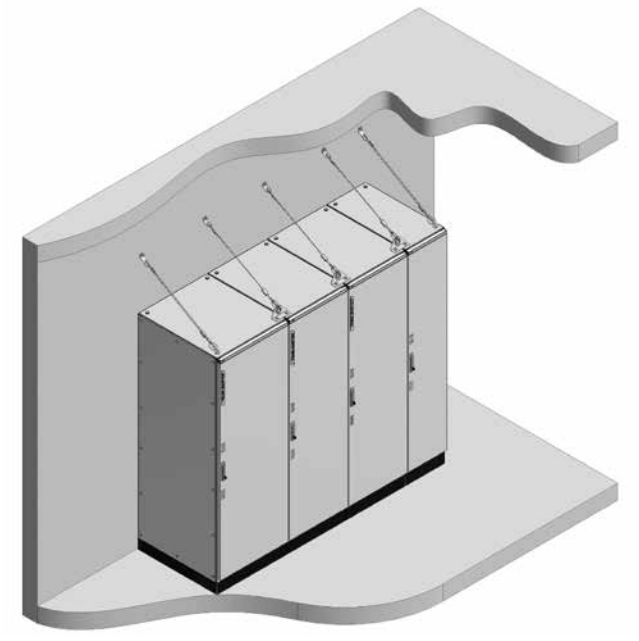

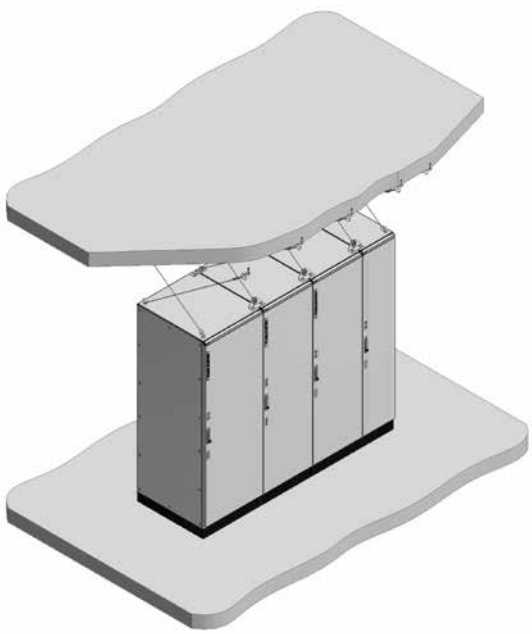

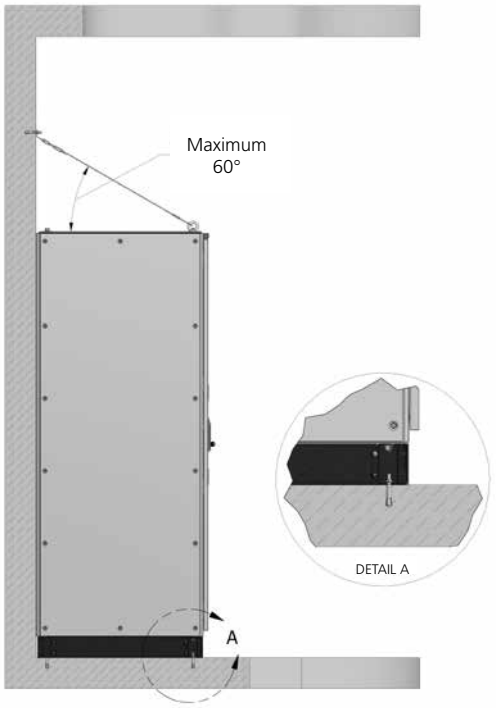

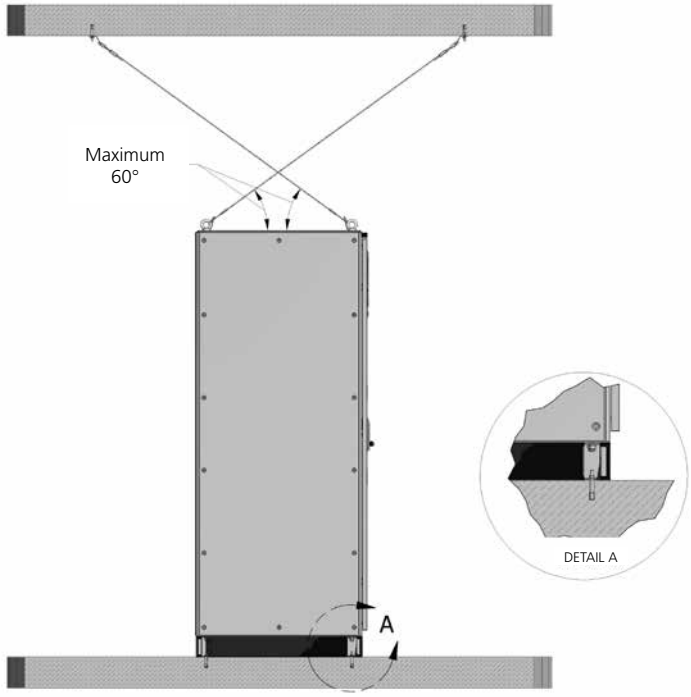

1. Each panel section will be fixed to the mounting floor with M12 anchor bolts with minimum 8.8 mechanical strength through 4 mounting holes in its base.
2. Each panel section will be fixed to the reinforced concrete building element by using minimum 4.8 mm diameter steel wire and M12 anchor bolts at carrying rings. Single carrying ring will be used in the first and last sections, and double carrying rings will be used in the intermediate sections.
3. The angle that the steel wire will create with the upper surface of the cabinet will not exceed 60°
4. It is assumed that structural elements which the connections are made have their own seismic strength.

Seismic Rules for Wall Moundted Panels

Concrete Wall

Wall mounted panels will be fixed to reinforced concrete walls by using 4xM8 anchor bolts with minimum 8.8 mechanical strength at connection brackets.

Application Example:

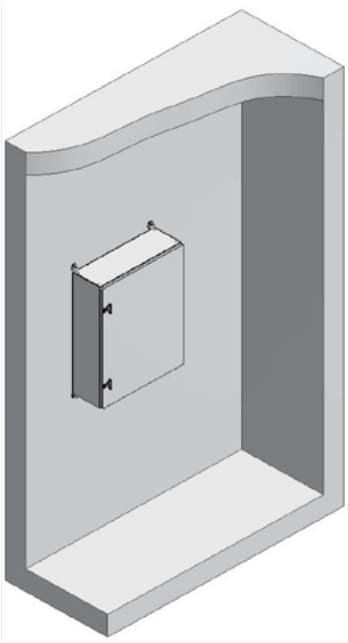

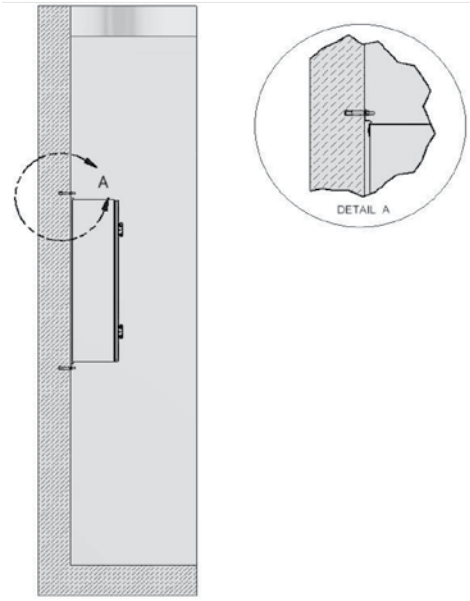

Non-Concrete Wall

Wall-mounted panels will not be directly fixed to non-reinforced concrete walls. In such cases, a steel carrier construction will be used (fixed between the concrete floor and the ceiling) and the connection brackets of the panel will be fixed to this construction by using 4 pieces of M8 bolts with mechanical strength of minimum 8.8.

Application Example:

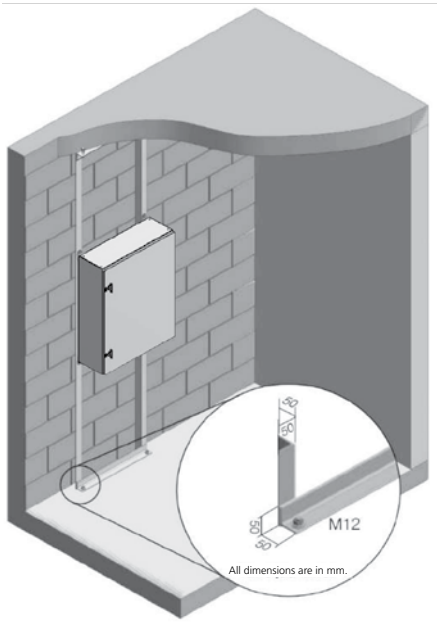

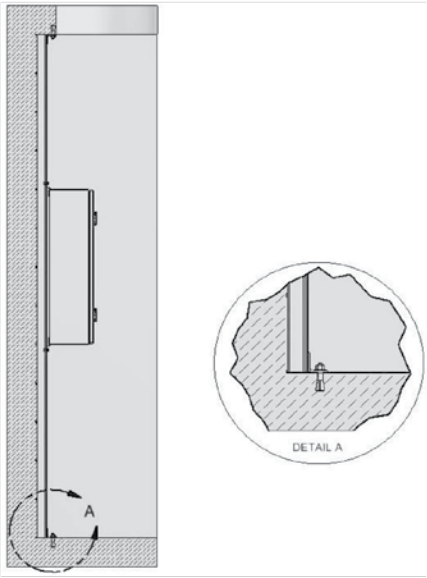

Framework Assembly

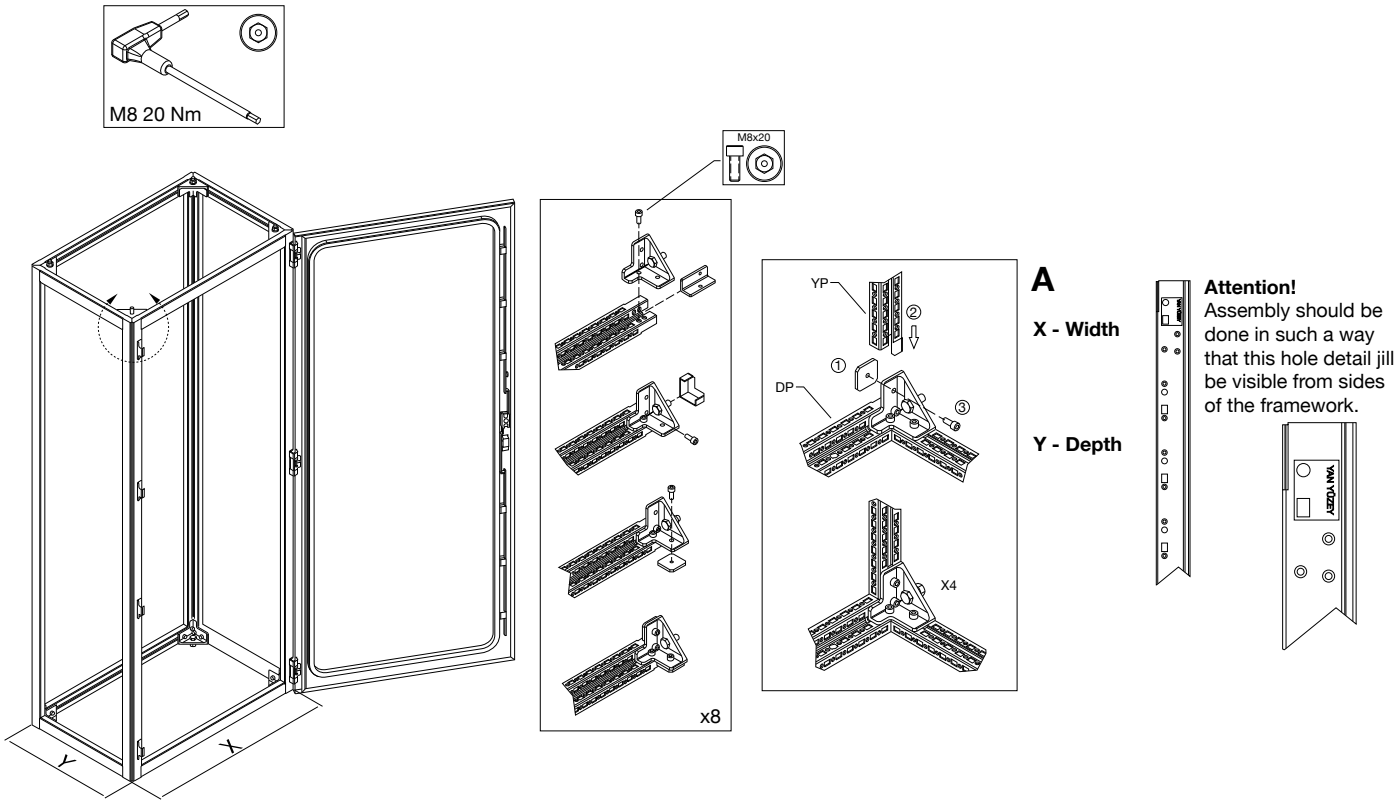

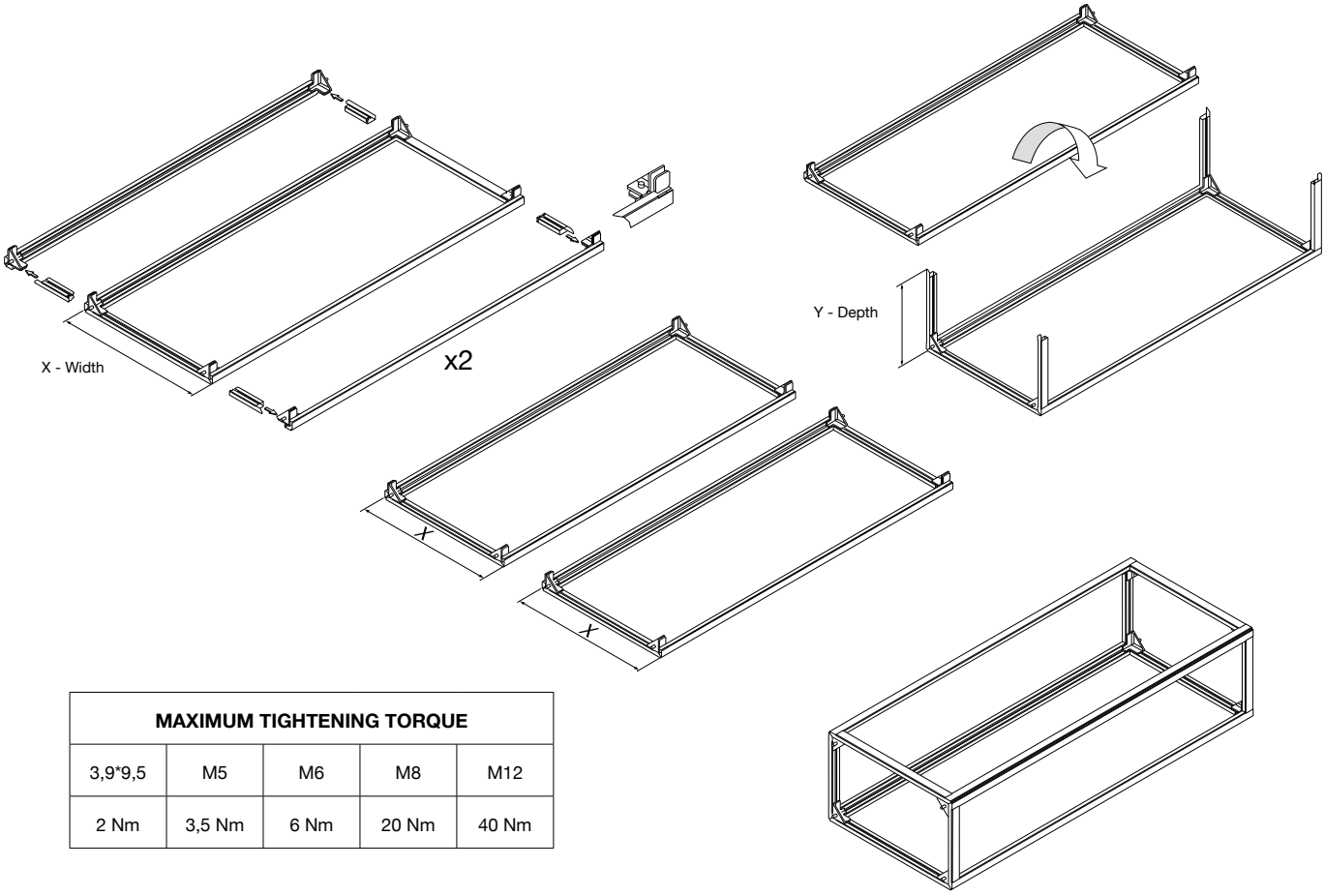

MAXIMUM TIGHTENING TORQUE				
3,9*9,5	M5	M6	M8	M12
2 Nm	3,5 Nm	6 Nm	20 Nm	40 Nm

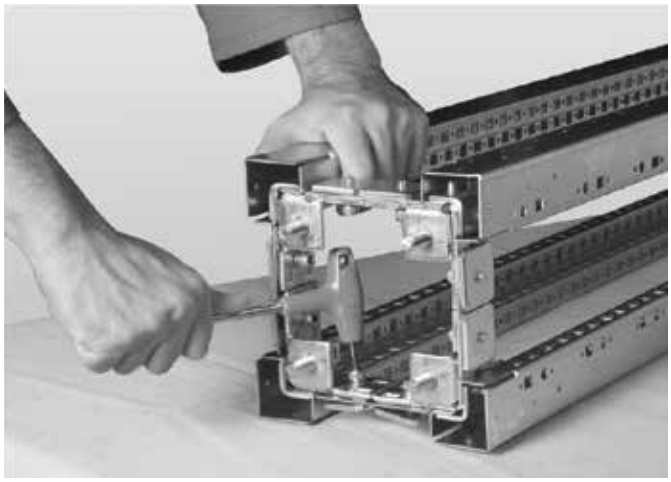

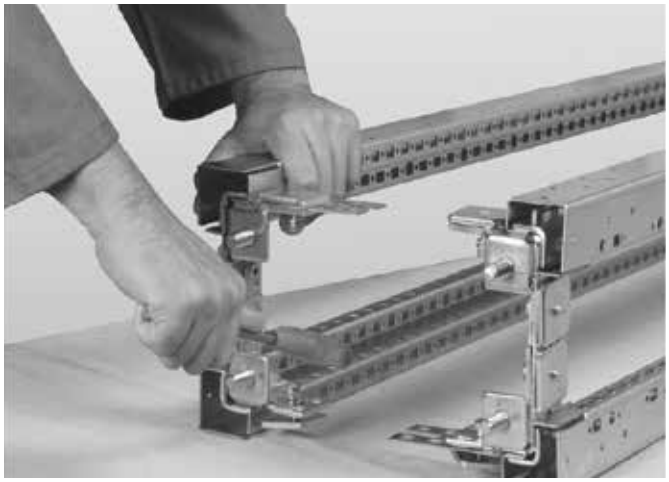

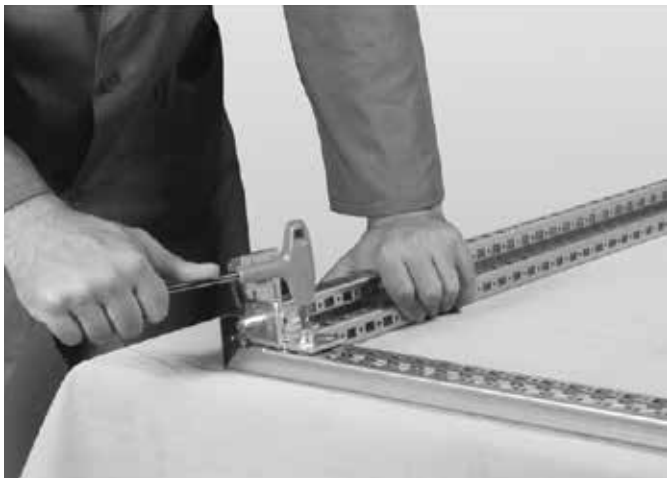

One enclosure framework including plinth and roof panel can be assembled by two worker in 15 minutes.

PACKING

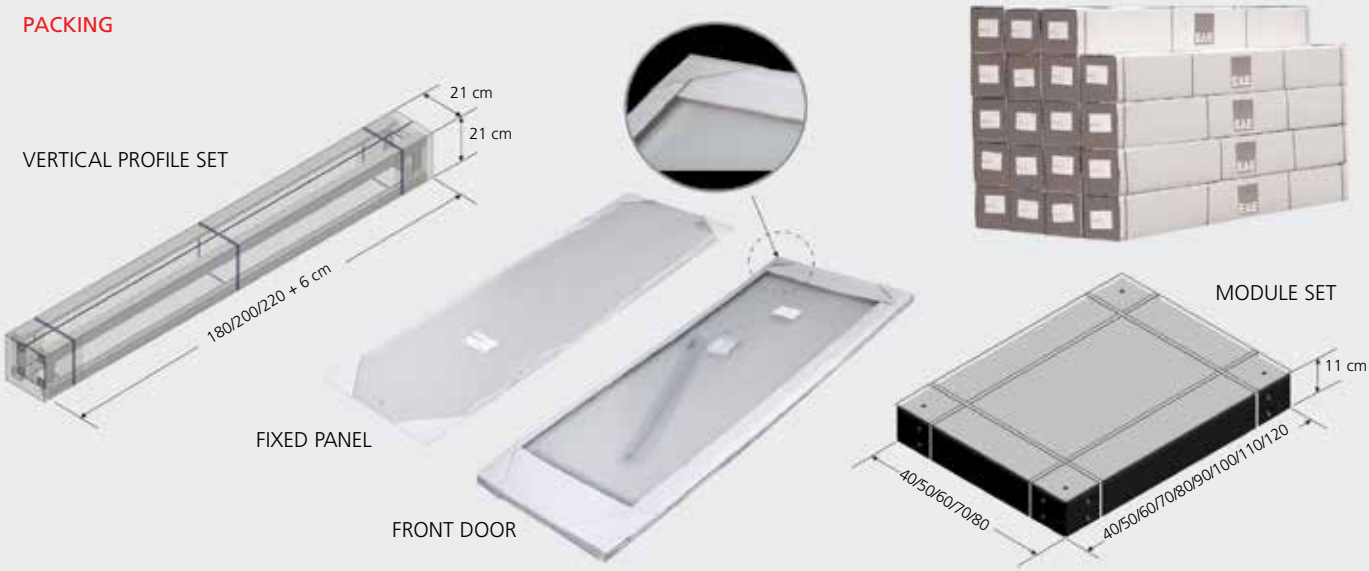

Degree of Protection - IP

IPXX → Protection against ingress of water

↓ Protection against contact and against solid foreign objects

			Non-protected	Protected against vertically falling water drops	Protected against vertically falling water drops when enclosure tilted up to 15°	Protected against spraying water	Protected against splashing water	Protected against water jets	Protected against powerful water jets	Protected against the effects of temporary immersion in water	Protected against the effects of continuous immersion in water
			0	1	2	3	4	5	6	7	8
	Non-protected	0	IP00	-	-	-	-	-	-	-	-
	Protected against solid foreign objects of ≥ 50 mm ø	1	IP10	-	-	-	-	-	-	-	-
	Protected against solid foreign objects of ≥ 12.5 mm ø	2	IP20	IP21	-	-	-	-	-	-	-
	Protected against solid foreign objects of ≥ 2.5 mm ø	3	IP30	IP31	IP32	-	-	-	-	-	-
	Protected against solid foreign objects of ≥ 1.0 mm ø	4	IP40	IP41	IP42	IP43	-	-	-	-	-
	Protected against ingress of dust (dust-protected)	5	-	-	-	-	IP54	IP55	IP56	-	-
	Protected against ingress of dust by underpressure (dust-tight)	6	-	-	-	-	-	IP65	IP66	IP67	-

IK Mechanical Impact Protection

	0,25 kg, 56 mm	0,25 kg, 80 mm	0,25 kg, 140 mm	0,25 kg, 200 mm	0,25 kg, 280 mm	0,25 kg, 400 mm	0,5 kg, 400 mm	1,7 kg, 300 mm	5 kg, 200 mm	5 kg, 400 mm
IK Value	01	02	03	04	05	06	07	08	09	10
Impact value (Joule)	0.14	0.20	0.35	0.50	0.70	1	2	5	10	20
Falling Height (mm)	56	80	140	200	280	400	400	300	200	400
Equivalent Weight (kg)	0.25	0.25	0.25	0.25	0.25	0.25	0.50	1.70	5	5

EAE Elektroteknik A.S.
Ikitelli Organize Sanayi Bolgesi
Eski Turgut Ozal Caddesi
Ziya Gokalp Mahallesi No: 20
34490 Basaksehir - Istanbul / TURKEY
Phone: +90 (212) 549 26 39 (pbx)
Fax : +90 (212) 549 37 91
E-mail: ekabin@eaegroup.com

www.eaeelektroteknik.com